FEDERAL SIGNAL
Safety and Security Systems

Pathfinder®

Installation and Maintenance Instructions

25500463
C1 1120
Printed in U.S.A.
© Copyright 2018-2020 Federal Signal Corporation

Limited Warranty

This product is subject to and covered by a limited warranty, a copy of which can be found at www.fedsig.com/SSG-Warranty. A copy of this limited warranty can also be obtained by written request to Federal Signal Corporation, 2645 Federal Signal Drive, University Park, IL 60484, email to info@fedsig.com or call +1 708-534-3400.

This limited warranty is in lieu of all other warranties, express or implied, contractual or statutory, including, but not limited to the warranty of merchantability, warranty of fitness for a particular purpose and any warranty against failure of its essential purpose.

FEDERAL SIGNAL
Safety and Security Systems

2645 Federal Signal Drive
University Park, Illinois 60484

www.fedsig.com

Customer Support
Police/Fire-EMS: 800-264-3578 • +1 708 534-3400
Work Truck: 800-824-0254 • +1 708 534-3400

Technical Support 800-433-9132 • +1 708 534-3400

All product names or trademarks are properties of their respective owners.

Contents

Safety Messages for Installers and Operators **5**
Safety Messages to Installers of Sound/Light Systems 5
Safety Messages to Operators of Sound/Light Systems 8

An Overview of the Pathfinder® **10**
Siren, PA, and Speakers 10
Light Bars and SignalMaster® Control 10
FS Vehicle Integration 11
Programmable Solid-State Auxiliary Relays 11
Programmable Input Circuits 11
LED Indicators and Visual Diagnostics 11
System Specifications 11
Siren Specifications 12
Relay Specifications 12
Pathfinder Kit Contents 13

Wiring the Pathfinder® **16**
General Guidelines for Wiring the Pathfinder on a Vehicle 16
Overview of the Pathfinder Connections 19
Convergence Network Ports 19
Relay Outputs 19
General Purpose Inputs 19
Park Input 19
Horn Ring Transfer 20
Speaker Connections 21
Speaker Diagnostics 21
Radio Re-Broadcast 21
FS Vehicle Integration 21
Ignition Input 21
System Power 22

Mounting the Pathfinder **23**
Mounting the Siren 25
Mounting the Control Head (PF 100R and PF200R) 25

Testing the Pathfinder® Installation **27**
Horn Ring Operation 29

Control Head Legends and Safety Messages **30**
Distributing the Safety Message Card 31
Applying the Siren Safety Labels in the Vehicle 31

Safety Messages **32**
Safety Messages to Personnel Servicing Federal Electronic Sirens 32
Servicing the Pathfinder **33**
Replacing the Slide Switch 33
Getting Technical Support and Service **35**
Getting Repair Service 35

Tables

Table 1 System Specifications 11
Table 2 Siren Specifications 12
Table 3 Relay Specifications 12
Table 4 PF100 and PF200 Kit Contents 13
Table 5 PF100R and PF200R Kit Contents 14
Table 6 PF200-RM Kit Contents 15
Table 7 Pathfinder® Switch Default Programming 28
Table 8 Pathfinder Button Default Programming 28
Table 9 Pathfinder Input Default Programming 29
Table 10 Service Parts 35

Figures

Figure 1 100W Single Tone and 200W Dual Tone Siren Connections 17
Figure 2 100W Siren with Integrated Rumbler® 18
Figure 3 Battery Connections 22
Figure 4 Pathfinder Dimensions 24
Figure 5 Mounting Hardware Dimensions 24
Figure 6 Bail Bracket Assembly 25
Figure 7 Bracket Attached to Back of Control Head 26
Figure 8 Brackets Attached to Control Head and Mounting Surface 26
Figure 9 Pathfinder Default Programming 27
Figure 10 Installing the Control Head Labels 30
Figure 11 Safety Message Card (left) and Siren Safety Labels (right) 31
Figure 12 Keypad Removal 33
Figure 13 Slide Switch Replacement 34

Safety Messages for Installers and Operators

For your safety, read and understand this manual thoroughly before installing, operating, and servicing the Pathfinder siren amplifier/relay module. The safety messages presented in this chapter and throughout the manual are reminders to exercise extreme care at all times. Read and understand the safety instructions to installers (doc. no. 256A692), and keep it close at hand for reference.

To download copies of this manual, go to www.fedsig.com or call the Federal Signal Service Department at 1-800-433-9132 (708-534-3400) 7 a.m. to 5 p.m., Monday through Friday (CT).

Safety Messages to Installers of Sound/Light Systems

⚠ WARNING

People's lives depend on your proper installation and servicing of Federal Signal products. It is important to read and follow all instructions shipped with this product. Listed below are some other important safety instructions and precautions you should follow:

Before Installation

Qualifications

- To properly install an electronic siren, you must have a good understanding of automotive electrical procedures and systems, along with proficiency in the installation and service of safety warning equipment. Always refer to the vehicle's service manuals when performing equipment installations on a vehicle.

Sound Hazards

- Your hearing and the hearing of others, in or close to your emergency vehicle, could be damaged by loud sounds. This can occur from short exposures to very loud sounds, or from longer exposures to moderately loud sounds. For hearing conservation guidance, refer to federal, state, or local recommendations. OSHA Standard 1910.95 offers guidance on "Permissible Noise Exposure."
- All effective sirens and horns produce loud sounds (120 dB) that may cause permanent hearing loss. Always minimize your exposure to siren sound and wear hearing protection. Do not sound the siren indoors or in enclosed areas where you and others will be exposed to the sound.
- Federal Signal siren amplifier/relay modules and speakers are designed to work together as a system. Combining a siren and speaker from different manufacturers may reduce the warning effectiveness of the siren system and may damage the components. Verify or test your combination to make sure the system works together properly and meets federal, state, and local standards or guidelines.

During Installation

- Do NOT get metal shavings inside the product. Metal shavings in the product can cause the system to fail. If drilling must be done near the unit, place an ESD-approved cover over the unit to prevent metal shavings from entering the unit. Inspect the unit after mounting to ensure that there are no shavings present in or near the unit.
- Do NOT connect this system to the vehicle battery until ALL other electrical connections are made, mounting of all components is complete, and you have verified that no shorts exist. If wiring is shorted to vehicle frame, high current conductors can cause hazardous sparks, resulting in electrical fires or flying molten metal.
- Ensure that the siren amplifier/relay module and speaker(s) in your installation have compatible wattage ratings.
- In order for the electronic siren to function properly, the ground connection must be made to the NEGATIVE battery terminal.
- Sound output will be severely reduced if any objects are in front of the speaker. If maximum sound output is required for your application, ensure that the front of the speaker is clear of any obstructions.
- Install the speaker(s) as far forward on the vehicle as possible in a location that provides maximum signaling effectiveness and minimizes the sound reaching the vehicle's occupants. Refer to the National Institute of Justice guide 500-00 for further information.
- Mounting the speakers behind the grille will reduce the sound output and warning effectiveness of the siren system. Before mounting speakers behind the grille, make sure the vehicle operators are trained and understand that this type of installation is less effective for warning others.
- Sound propagation and warning effectiveness will be severely reduced if the speaker is not facing forward. Carefully follow the installation instructions and always install the speaker with the projector facing forward.
- Do NOT install the speaker(s) or route the speaker wires where they may interfere with the operation of airbag sensors.
- Installation of two speakers requires wiring speakers in phase.
- Never attempt to install aftermarket equipment, which connects to the vehicle wiring, without reviewing a vehicle wiring diagram available from the vehicle manufacturer. Ensure that your installation will not affect vehicle operation and safety functions or circuits. Always check vehicle for proper operation after installation.
- Do NOT install equipment or route wiring or cord in the deployment path of an airbag.
- If a vehicle seat is temporarily removed, verify with the vehicle manufacturer if the seat needs to be recalibrated for proper airbag deployment.

- Locate the control head so the vehicle, controls, and microphone can be operated safely.
- When drilling into a vehicle structure, ensure that both sides of the surface are clear of anything that could be damaged. All drilled holes should be deburred and all sharp edges should be smoothed. All wires going through drilled holes should be protected by a grommet or convolute/split-loom tubing. All exterior drilled holes must be sealed with Motorcraft seam sealer T-A-2-B or equivalent to prevent the potential exposure to carbon monoxide or other potentially harmful fumes. Failure to observe this warning could cause serious injury or death.

After Installation

- After installation, test the siren and light system to ensure that it is operating properly.
- Test all vehicle functions, including horn operation, vehicle safety functions, and vehicle light systems, to ensure proper operation. Ensure that installation has not affected vehicle operation or changed any vehicle safety function or circuit.
- After testing is complete, provide a copy of these instructions to the instructional staff and all operating personnel.
- File these instructions in a safe place and refer to them when maintaining or reinstalling the product.

Failure to follow all safety precautions and instructions may result in property damage, serious injury, or death.

RETAIN AND REFER TO THESE MESSAGES

Safety Messages to Operators of Sound/Light Systems

⚠ WARNING

People's lives depend on your safe operation of Federal Signal products. It is important to read and follow all instructions shipped with the products. Listed below are some other important safety instructions and precautions you should follow:

- Do not attempt to activate or deactivate the light system control while driving in a hazardous situation.
- Although your warning system is operating properly, it may not be completely effective. People may not see or heed your warning signal. You must recognize this fact and continue to drive cautiously.
- Situations may occur that obstruct your warning signal when natural and man-made objects are between your vehicle and others, such as raising your hood or trunk lid. If these situations occur, be especially careful.
- All effective sirens and horns produce loud sounds that may cause, in certain situations, permanent hearing loss. You and your passengers should consider taking appropriate safety precautions, such as wearing hearing protection.
- In order to be an effective warning device, this product produces bright light that can be hazardous to your eyesight when viewed at a close range. Do not stare directly into this lighting product at a close range, or permanent damage to your eyesight may occur.
- It is important that you fully understand how to safely operate this warning system before use.
- Operate your vehicle and its light/sound system in accordance with your department's Standard Operating Procedures.
- If a selected function does not perform properly or if any of the lamps remain illuminated when the control is off, disconnect the power connector from the control unit and contact the nearest service center.
- At the start of your shift, ensure that the entire warning light system and the siren system is securely attached and operating properly.
- The effectiveness of an interior mounted warning light depends on the clarity, the tinting, and the angle of the glass it is being placed behind. Tinting, dirt, defects, and steeply angled glass reduce the light output of the warning light. This may reduce the effectiveness of the light as a warning signal. If your vehicle has dirty, tinted, or steeply angled glass, use extra caution when driving your vehicle or blocking the right of way with your vehicle.
- Suction cup mounting is for temporary applications only. The unit should be removed from the window and stored securely when not in use. Temperature changes and sunlight can cause suction cups to lose holding power. Periodically check the unit to be sure the suction cups have a firm grip on the

mounting surface. An improperly secured light could fall off of the vehicle, causing injury and damage.

- The holding power of magnetic mounting systems is dependent upon surface finish, surface flatness, and thickness of the steel mounting surface. Therefore, to promote proper magnetic mounting:
  - Keep the mounting surface and magnets clean, dry, and free of foreign particles that prevent good surface contact.
  - Ensure that the mounting surface is flat.
  - Do not use a magnet mounting system on vehicles with vinyl tops.
  - To prevent the light assembly from sliding on mounting surface, avoid quick acceleration and hard stops.

Failure to follow these precautions may result in property damage, serious injury, or death.

RETAIN AND REFER TO THESE MESSAGES

An Overview of the Pathfinder®

The Pathfinder siren is a full-featured, programmable, electronic siren and light control system. State-of-the-art microprocessor technology is used to create a system with a small, compact siren system that can be installed under the dashboard (Self -Contained), in the trunk, or under the seat (remote) of any vehicle with a 12 V or 24 V negative ground system. The Pathfinder siren uses class D amplifier technology without the need for a large and heavy transformer. The PF200 provides two independent 100 W channels of audio, for a total of 200 W. The PF100 provides one 100-watt channel.

The module provides the automatic, simultaneous light and siren activation required by some jurisdictions. A security gun timer is also provided to minimize the possibility of unauthorized shotgun release. The module has two easily accessible Convergence Network serial ports that can connect a remote mounted control head and/or any serially-controlled Federal Signal product. The siren also has FS Vehicle Integration to allow for various vehicle events to integrate with siren/lighting control. A variety of system features can be programmed with the Convergence Network Configuration Software from a computer via a USB cable that connects the siren amplifier. System features include flash patterns, siren tones, and momentary, push-on/push-off, timed relay operation, as well as vehicle events. Programming does not require disassembling or removing any hardware from the vehicle.

Siren, PA, and Speakers

The Pathfinder produces wail, yelp, priority, and an air horn sound by default. The horn-ring transfer feature enables the driver to control siren tones by pressing the horn button. Public address is available with the Federal Signal microphone, which is included with the system. Radio rebroadcast is also available. The Pathfinder PF200 can drive one or two 11-ohm impedance, 100-watt speakers. The two 11-ohm impedance, 100-watt speakers have separate wires that allow the Pathfinder to provide dual siren tones. Alternatively, the Pathfinder can drive one 11-ohm impedance, 100-watt speaker on one channel, and two Rumbler speakers on the second channel to provide Rumbler integration without the need for a secondary external amplifier.

The PF100 Pathfinder can drive one 11-ohm impedance, 100-watt speaker.

Light Bars and SignalMaster® Control

Compatible light bars include full featured, serially-controlled Federal Signal Legend®, Valor®, Allegiant™, Navigator®, and Integrity®, as well as the SpectraLux® ILS Series of interior-mounted light bars. In addition, flash rates and patterns, light bar dimming, external SignalMaster control and other options can be programmed with the Convergence Network Configuration Software.

FS Vehicle Integration

The Pathfinder® siren includes the capability to integrate with the existing vehicle CAN bus. The FS Vehicle Integration uses a vehicle-specific cable (not included) to seamlessly integrate with the vehicle. Vehicle events can be programmed with the Convergence Network Configuration Software to interface with the lighting/siren control. The Convergence Network Configuration Software contains the latest list of events supported based on model, make and year of the vehicle.

Programmable Solid-State Auxiliary Relays

The Pathfinder PF200 has 12 solid-state relays: five ten-amphere active high solid-state relays, one ten-amphere high-low and six five-amphere high. The maximum output current for each relay can be set with the Convergence Network Configuration Software.

The PF100 version has six solid-state relays: five ten-amphere active high solid-state relays, and one ten-amphere high-low relay.

Programmable Input Circuits

The Pathfinder has connections for four general purpose input circuits, plus dedicated inputs for park, horn and ign. Ignition is an active-high only input, while all other inputs are programmable for active-high or active-low. The inputs are most commonly used for switches that send a signal to the siren when a condition in the vehicle changes.

LED Indicators and Visual Diagnostics

All buttons on the control head glow when the system is on. Pressed buttons turn bright to indicate that the function they control is active. The buttons are programmable for red or blue backlighting. LEDs on the keypad mimic these active SignalMaster patterns: Left, Right, Center-Out, and Warn. An LED glows over the position in which the slide switch is placed. Diagnostic LEDs for speaker fault detection are also available and are programmable.

System Specifications

Table 1 System Specifications

Input Voltage	11 Vdc to 28 Vdc
Polarity	Negative ground only
Operating Temperature Range	-40°C to +80°C (-40°C to +176°C) (all relays at 50% power)
Standby Current	Less than 0.1 A
Max Input Current	75 A (siren and relays)
Dimensions:	
PF200 (Self Contained Siren)	
Height	2.5 in (6.4 cm)
Width	6.0 in (15.2 cm)
Length	8.4 in (21.3 cm)
Net Weight	3.9 lb (1.77 kg)

Siren Specifications

Table 2 Siren Specifications

Speakers	One or two 100 W, 11-ohm speakers or One 100 W, 11-ohm speaker and two Rumbler speakers
Operating Current	100 W - One 11-ohm speaker – 8 A 200 W - Two 11-ohm speakers – 16 A (13.6 V battery, No Relays active)
Frequency Range	182 to 1600 Hz
Nominal Cycle Rate	Wail: 12 cycles per minute Yelp: 180 cycles per minute Priority: 370 cycles per minute High-Low: 60 cycles per minute
Nominal Voltage Output	64 V peak-to-peak (siren tones)
Audio Response	300 Hz to 3,000 Hz ± 3 dB
Siren Tone Compliances	SAE J1849 JUL89

Relay Specifications

Table 3 Relay Specifications

Relays 1-5	10 A (active high)
Relays 6	10 A (active high or active low)
Relays 7-12 (PF200 only)	5 A (active high)

Pathfinder Kit Contents

Tables 4 through 6 list the parts included with the kit. After unpacking the kit, examine it for damage that may have occurred in transit. If the product has been damaged, file a claim immediately with the carrier stating the extent of damage. Carefully check all envelopes, shipping labels, and tags before removing or destroying them. Ensure all parts in the packing list are included in the shipment. If any parts are missing, call Federal Signal Customer Support at 1-800-264-3578, 7 a.m. to 5 p.m., Monday through Friday, Central Time.

Table 4 PF100 and PF200 Kit Contents

Qty.	Description	Part Number - PF100	Part Number - PF200
1	100 or 100/200-Watt Siren/Light Controller, Self-Cont	862302144-100	862302144
1	Keypad Legend Stickers	8572294	8572294
1	Bracket, Bail, Pathfinder, Plastic	862303559	862303559
1	RS485 25 ft (7.62 m) Cable Assembly	1751357-02	1751357-02
1	Wire Assemby, Relay, Pathfinder	17501359	17501359
1	Wire Assembly, I/O, Pathfinder	17501360	17501360
1	Cable, USB 2.0, A Male to Mini-B	17501813	17501813
1	Kit, Hardware, Pathfinder	77700765	77700765
	Siren Mount Kit Contains:		
2	Term, #8, 6 AWG	19001363	19001363
2	Bolt, Carriage, 1/4"-20, SS	7004A020-12	7004A020-12
2	Nut, Ext Keps, 1/4"-20, Stl	7058A005	7058A005
2	Washer, Flat, 1/4-inch	7072A028	7072A028
2	Screw, Pan, Sems, M4	70000451-06	70000451-06
2	Lockwasher, Int Tth, 1/4-inch	7075A016	7075A016

Table 5 PF100R and PF200R Kit Contents

Qty.	Description	Part Number - PF100R	Part Number - PF200R
1	100 or 100/200-Watt Amplifier, Pathfinder	862302662-100	862302662
1	Control Head, Remote, PF200R, Pathfinder	862302151	862302151
1	Keypad Legend Stickers	8572294	8572294
1	Dynamic Microphone with Mod	258B577-03	258B577-03
1	Bracket, Bail, Pathfinder, Plastic	862303559	862303559
2	Bracket, Mtg. Control, Smart	85361065	85361065
1	Cable Assy, RS485, 25ft (7.62 m)	1751357-02	1751357-02
1	Wire Assembly, Relay, Pathfinder	17501359	17501359
1	Wire Assy, I/O, Pathfinder	17501360	17501360
1	Cable, USB 2.0, A Male to Mini-B	17501813	17501813
1	Connector, 8P8C RJ45 T Adapter,1F TO 2	13901989	13901989
1	RS485 8-inch Cable Assembly	1751357-06	1751357-06
1	Kit, Hardware, Pathfinder	77700765	77700765
	Siren Mount Kit Contains:		
2	Term, #8, 6 AWG	19001363	19001363
2	Bolt, Carriage, 1/4"-20, SS	7004A020-12	7004A020-12
2	Nut, Ext Keps, 1/4"-20, Stl	7058A005	7058A005
2	Washer, Flat, 1/4-inch	7072A028	7072A028
2	Screw, Pan, Sems, M4	70000451-06	70000451-06
2	Lockwasher, Int Tth, 1/4-inch	7075A016	7075A016
1	Kit, Hardware, Control Head, Pathfinder	77700992	77700992
	Control Head Kit Contains:		
2	Screw, 6-32, Pan HD, Phil	7000A404-05	7000A404-05
2	Bolt, Carriage, 1/4-20, SS	7004A020-12	7004A020-12
2	Screw, #10 TYP B, Pan Torx, Stl, Blk Zn	7011246-08	7011246-08
2	Washer, Flat, 1/4	7072A028	7072A028
2	Lockwasher, Split Stl #6 Screw	7074A001	7074A001
2	Lockwasher, Ext Tth, 1/4	7075A007	7075A007

Table 6 PF200-RM Kit Contents

Qty.	Description	Part Number
1	100/200-Watt Siren/Light Ctrlr,Rem. Mic	862302144-RM
1	Microphone, Mnct, Series D	MNCT-SD
1	Keypad Legends	8572294
1	Bracket, Bail, Pathfinder, Plastic	862303559
1	Cable Assy, RS485, 25ft	1751357-02
1	Wire Assy, Relay, Pathfinder	17501359
1	Wire Assy, I/O, Pathfinder	17501360
1	Cable, USB 2.0, A Male To Mini-B	17501813
1	Kit, Hardware, Pathfinder	77700765
	Contains:	
2	Term, #8, 6 AWG	19001363
2	Bolt, Carriage, 1/4"-20, SS	7004A020-12
2	Nut, Ext Keps, 1/4"-20, Stl	7058A005
2	Washer,Flat,1/4-inch	7072A028
2	Screw, Pan, Sems, M4	70000451-06
2	Lockwasher, Int Tth, 1/4-inch	7075A016

Wiring the Pathfinder®

General Guidelines for Wiring the Pathfinder on a Vehicle

⚠ WARNING

HIGH CURRENT ARCING: Do not connect this system to the vehicle battery until ALL other electrical connections are made and you have verified that no shorts exist. High current conductors can cause hazardous sparks or burning wire, resulting in electrical fires.

NOTICE

DRILLING PRECAUTIONS: Before drilling holes, check the area into which you plan to drill to ensure that you do not damage vehicle components. All drilled holes should be deburred and all sharp edges should be smoothed. Additionally, all exterior drilled holes must be sealed with Motorcraft seam sealer T-A-2-B or equivalent to prevent the potential exposure to carbon monoxide or other potentially harmful fumes. Failure to observe this warning could cause serious injury or death.

Before permanently installing the Pathfinder system, plan all wire routings and select the mounting locations for the siren amplifier/relay module. Read and understand all instructions included with related equipment before installing it. Ensure that all wiring is protected from damage during normal operation of the vehicle and away from any sharp edges and screws. Splice joints should be soldered or crimped with butt connectors and properly insulated. Splice joints that will be exposed to the elements should be adequately sealed and insulated. All wires that are extended should not be a lesser gauge than its original mating wire. Make sure that connections are easily accessible for assembly and service.

Figure 1 100W Single Tone and 200W Dual Tone Siren Connections

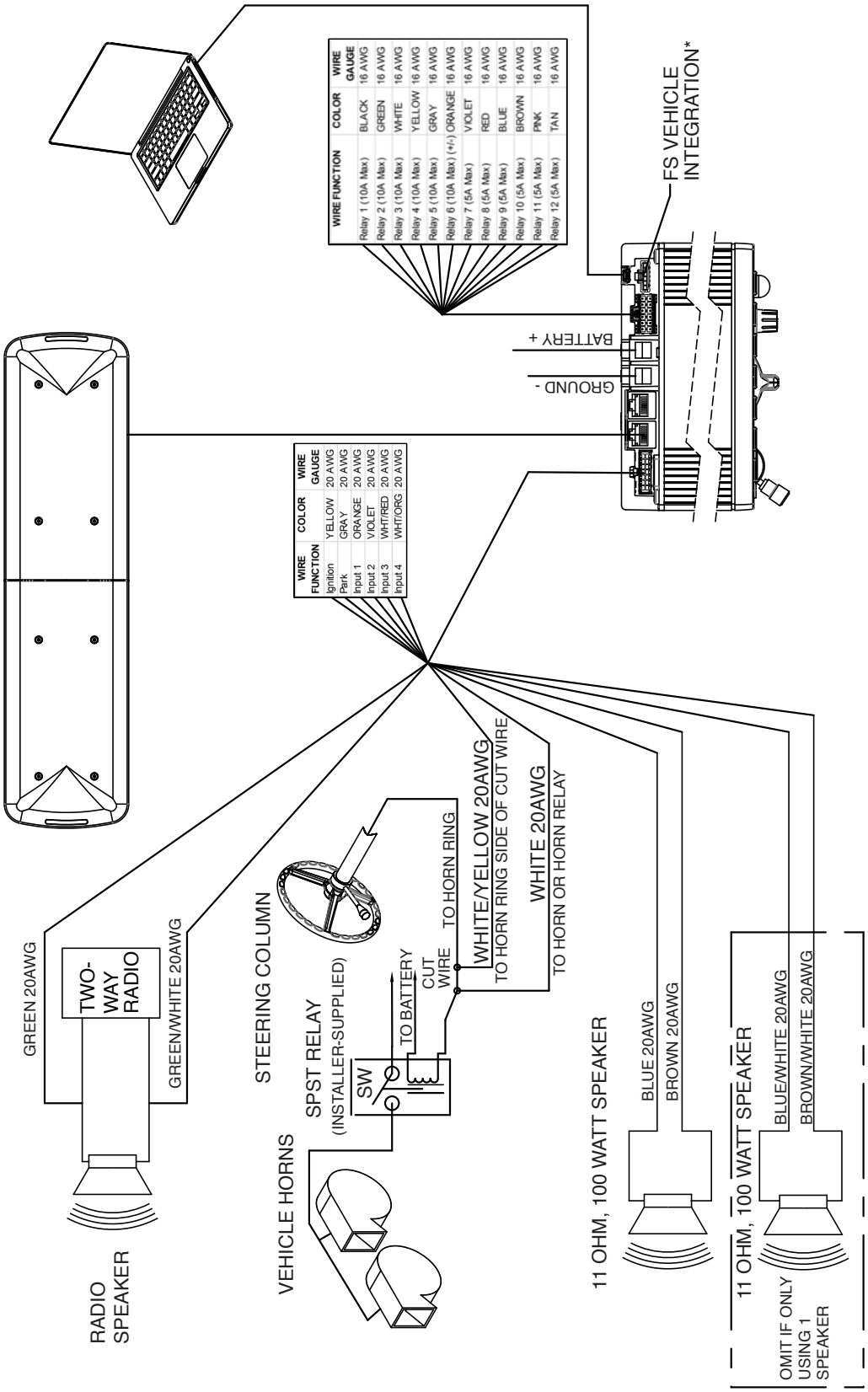

Figure 2 100 W Siren with Integrated Rumbler®

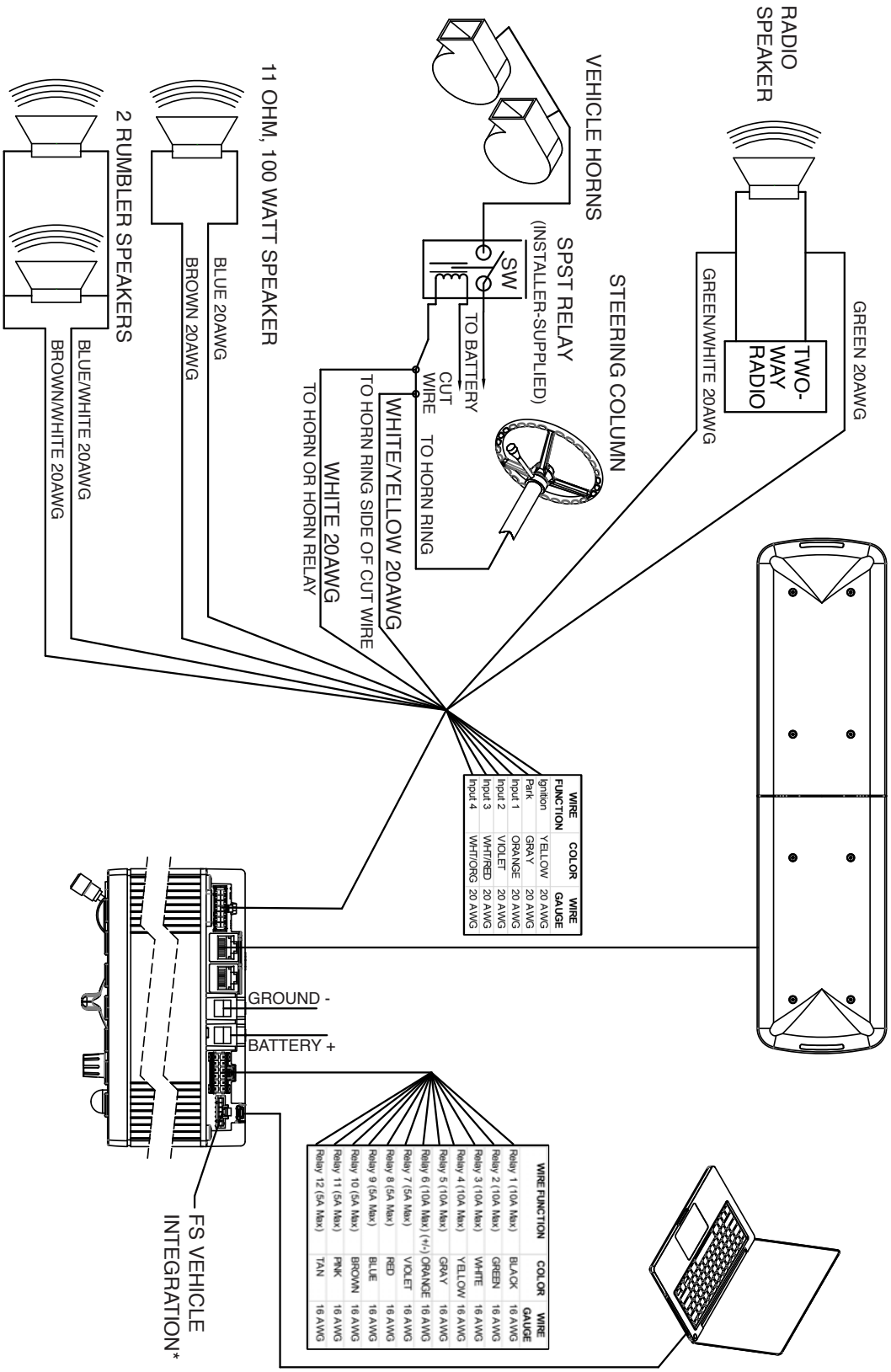

Overview of the Pathfinder Connections

To prepare the vehicle for connecting the Convergence Network system:

1. After planning where to route the wires and cables for the system components — such as Federal Signal warning lights, directional lights, and speakers — drill the holes for the wiring. Smooth, deburr, and insert a grommet in the holes.

2. Mount the system components according to the instructions included with each product.

The next sections describe how to connect and wire each system component to the siren amplifier/relay module.

Convergence Network Ports

There are two plug-and-play serial ports that communicate on the Federal Signal Convergence Network. Federal Signal Network devices include exterior mount light bar, interior mount ILS systems, and remote keypads. For instructions on mounting network devices, refer to the instructions included with the products. For instructions on configuring the operation of the devices connected through the Convergence Network ports, see the Help menu in the Convergence Network Configuration Software.

Relay Outputs

The Pathfinder® has a total of twelve solid-state relay output available. Relays 1-6 can each provide up to 10 A switched from the battery terminal on the Pathfinder. Relay 6 can switch both battery (active-high) and ground (active-low). Relays 7-12 (in PF200 models only) can each provide up to 5 A switched from the battery terminal on the Pathfinder. Each relay has a software programmable current limit set that can be set. By default, the current limit setting is disabled. Each relay also can also be programmed to flash various patterns and dim levels. See the Convergence Network Configuration Software for all available programming options available for the Pathfinder relay outputs.

General Purpose Inputs

The Pathfinder has a total of four general purpose inputs available. These inputs are set to detect active-high (battery) by default. Each input can be programmed individually to detect an active-high (battery) or active-low (ground). All inputs are software-configurable options that include siren activation or siren mute, timer settings, and switch operation. See the Convergence Network Configuration Software for all available programming options available for the Pathfinder inputs.

Park Input

The park input circuit sends a signal to the siren amplifier/relay module to mute all siren functions except Air Horn and Manual and shut off any flashing white light in the light bar when the vehicle transmission is shifted into park. By default, this input is set to detect active-low (ground). The park input can be programmed to detect an active-high (battery) or active-low (ground). The functionality of the park wire

(as well as the input polarity) can be configured with the Convergence Network Configuration Software. If using FS Vehicle Integration to detect the park event, this wire is not used. Fold and seal.

Horn Ring Transfer

NOTICE

DETERMINE CURRENT FOR HORN: The horn ring transfer circuit of the siren can switch a maximum of 5 A. Some vehicles do not have a horn relay and consequently will draw more than 5 A when the vehicle horn is activated. Consult your vehicle service manual or a qualified mechanic to determine the current required to activate the horn. If it is less than 5 A, perform step 3. If it is greater than 5 A, perform steps 4 through 9.

The horn input circuit is desiged to allow siren and lighting control from the vehicle horn. This input is set to detect active-low (ground) by default. The horn input can be programmed to detect an active-high (battery) or active-low (ground). The horn signal event may be available using FS Vehicle Integration, if so, fold and seal the unused leads.

NOTE: To enable horn-ring control of siren tones, obtain a SPST relay of enough contact-current capacity to activate the vehicle horn:

1. Cut the wire that connects the switch for the vehicle horn ring to the horn or horn relay. See Figure 3.
2. Splice the white/yellow wire from the power cable to the horn ring side of the wire that you cut in step 1.
3. Splice the white wire from the power cable to the horn side of the cut wire.
4. Mount the SPST relay in a suitable location.
5. Connect the horn side of the wire cut in step 1 to the relay-contact terminal.
6. Determine the “sense” of the vehicle’s horn ring activation circuit. Does the horn circuit require a switched positive (active-high) voltage or switched ground (active-low) for activation?
7. Connect the switched relay-contact terminal to the positive or negative potential you determined in step 6.
8. Connect the white wire from the power cable to one end of the relay coil.
9. Connect the other end of the relay coil to the opposite potential of that connected to the switched relay contact terminal in step 7.

Speaker Connections

The Pathfinder® PF200 is designed to operate with a few different speaker configurations. It can operate one or two 11-ohm impedance, 100 W speakers. If using two 11-ohm impedance, 100 W speakers, they must be wired on separate channels of the amplifier and in phase for proper operation. (See Figure 1.) Alternatively, it can operate one 11-ohm impedance, 100 W speaker and two Rumbler speakers, without the need for a separate amplifier. (See Figure 5.) By default, the siren is set for two 11-ohm impedance, 100 W speakers. See the Convergence Network Configuration Software for all available programming options available for the Pathfinder tones.

The Pathfinder PF100 is designed to operate with one 11-ohm impedence, 100W speaker.

Speaker Diagnostics

The Pathfinder siren is designed to detect speaker faults. Diagnostic LEDs available on the front of the keypad can provide operating status of each of the amplifier outputs. The LEDs are fully programmable and can be set to steady burn or flash when the siren detects a fault or normal operation for each individual speaker. By default, the diagnostic LEDs are disabled but can be programmed with the Convergence Network Configuration Software.

Radio Re-Broadcast

The Radio Re-Broadcast inputs allow incoming two-way radio messages to be amplified by the siren amplifier/relay module and rebroadcast over the siren speakers. The Radio Re-Broadcast gain is set in the Convergence Network Configuration Software.

FS Vehicle Integration

The Pathfinder can interface with the vehicle's OBDII port or up-fitter CAN bus using a separately available cable harness. Common signals that can be obtained are transmission, door, headlight, brake, and speed statues. Many other signals may available, depending on the make and model of vehicle. See the Convergence Network Configuration Software for programming options. If using FS Vehicle Integration, discrete wiring inputs may not be required for park, horn ring, and/or ignition. By default, the PathFinder has the FS Vehicle Integration port disabled.

Ignition Input

The ignition input is a programmable active high input that can be used to turn on and off the Pathfinder system. This input can be programmed to keep the system alive for a set time after ignition is removed. By default, this input is set to turn off the system immediately when ignition is removed. The functionality of the ignition wire can be configured with the Convergence Network Configuration Software. If using FS Vehicle Integration to detect the ignition event or key position, this wire is not used. Fold and seal.

System Power

The Pathfinder® system includes ring terminals for connecting the battery. The installer-supplied red (positive) and black (negative ground) power leads from the siren to the vehicle battery should be as short and direct as possible. Crimp the supplied ring terminal on the red lead and connect it through an in-line fuse to the positive battery terminal. The fuse must be of an amperage capacity sufficient to handle the total vehicle electrical loads plus siren. Crimp the supplied ring terminal on the black lead and connect it to the negative battery terminal. See Figure 3 for proper ring terminal orientation.

Figure 3 Battery Connections

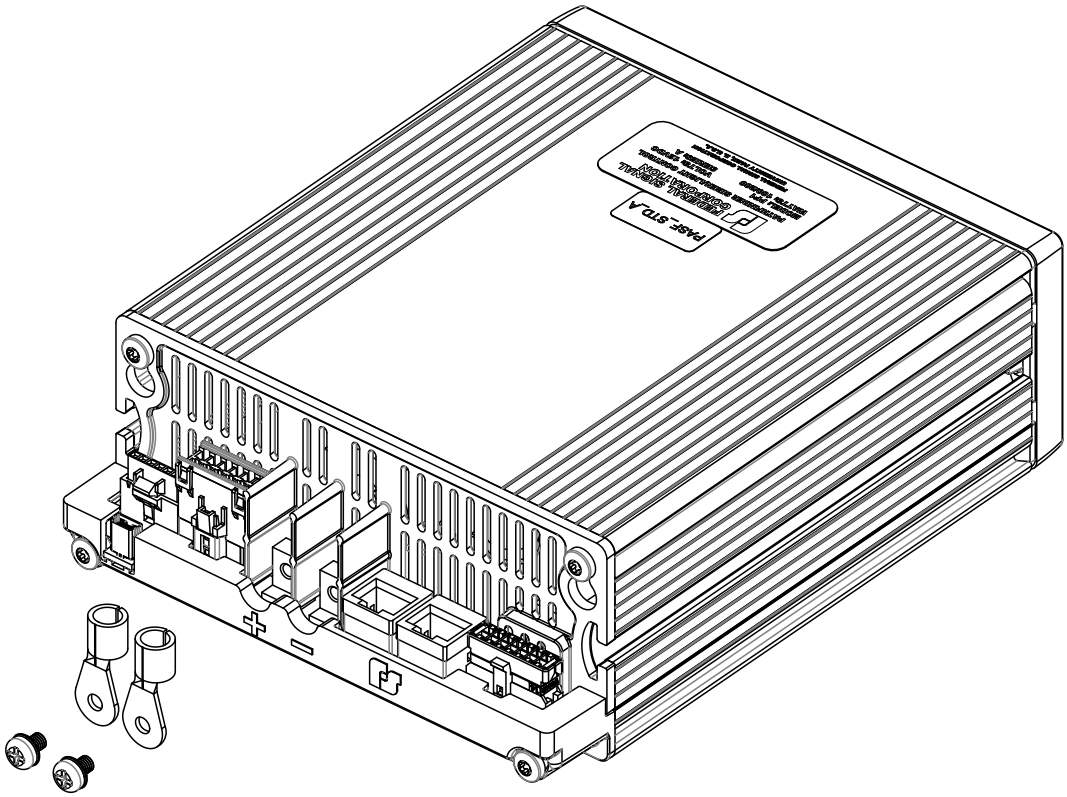

Mounting the Pathfinder

The next step in the installation after wiring and connecting the system is to permanently mount the siren in the vehicle. Verify that the mounting locations you selected earlier are safe for installing these components. Review the following precautions before mounting the equipment.

⚠ WARNING

AIRBAG DEPLOYMENT: Do not install equipment or route wiring in the deployment path of an airbag. Failure to observe this warning will reduce the effectiveness of the airbag or potentially dislodge the equipment, causing serious injury or death.

NOTICE

SEAT REMOVAL PRECAUTION: If a vehicle seat is temporarily removed, verify with the vehicle manufacturer if the seat needs to be recalibrated for proper airbag deployment.

NOTICE

UNIT REQUIRES AIR FLOW: Do not install the siren in areas where the air flow is restricted. Do not mount the unit near a heater duct or under the hood.

⚠ WARNING

MODULE IS NOT WATERPROOF: The housing of the siren is NOT waterproof.

Select a mounting location that allows the vehicle, controls, and microphone to be operated safely under all driving conditions. To identify safe mounting areas for equipment inside the vehicle, consult the vehicle manufacturer's guidelines. To avoid driver distraction and unreliable switch activation, the mounting location must not allow any movement of the unit. Installer-supplied mounting hardware is required to mount the siren.

Figure 4 Pathfinder Dimensions

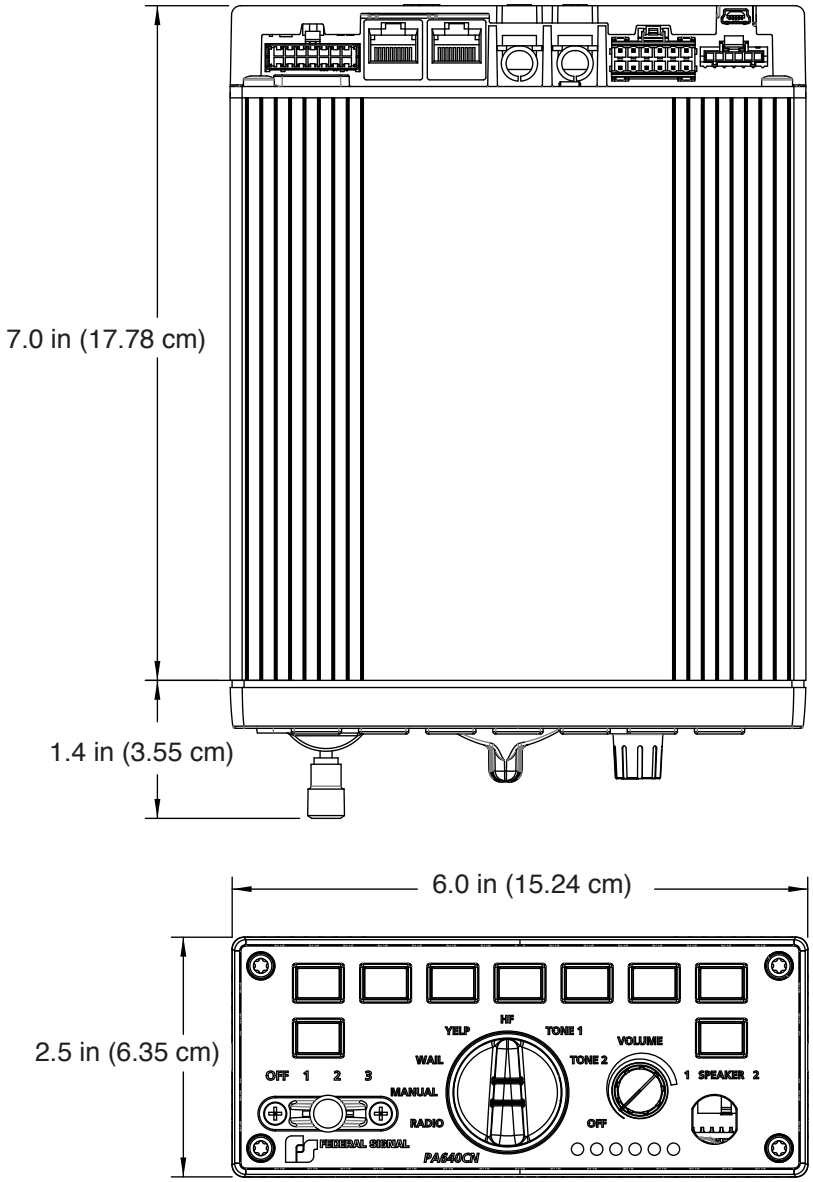

Figure 5 Mounting Hardware Dimensions

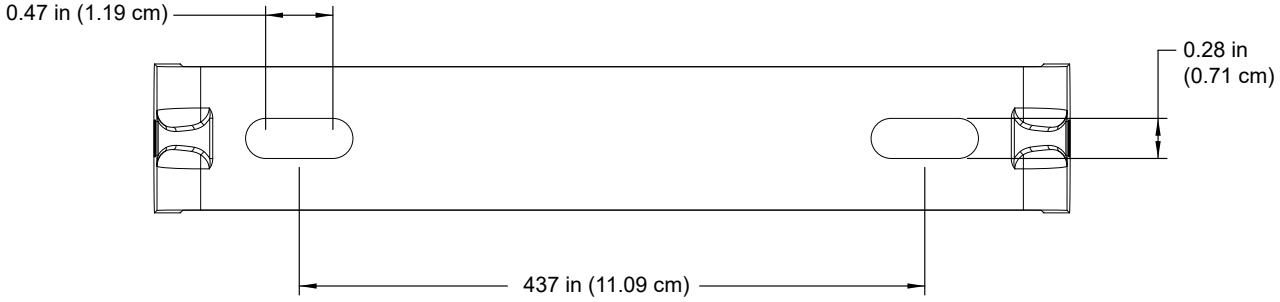

Figure 6 Bail Bracket Assembly

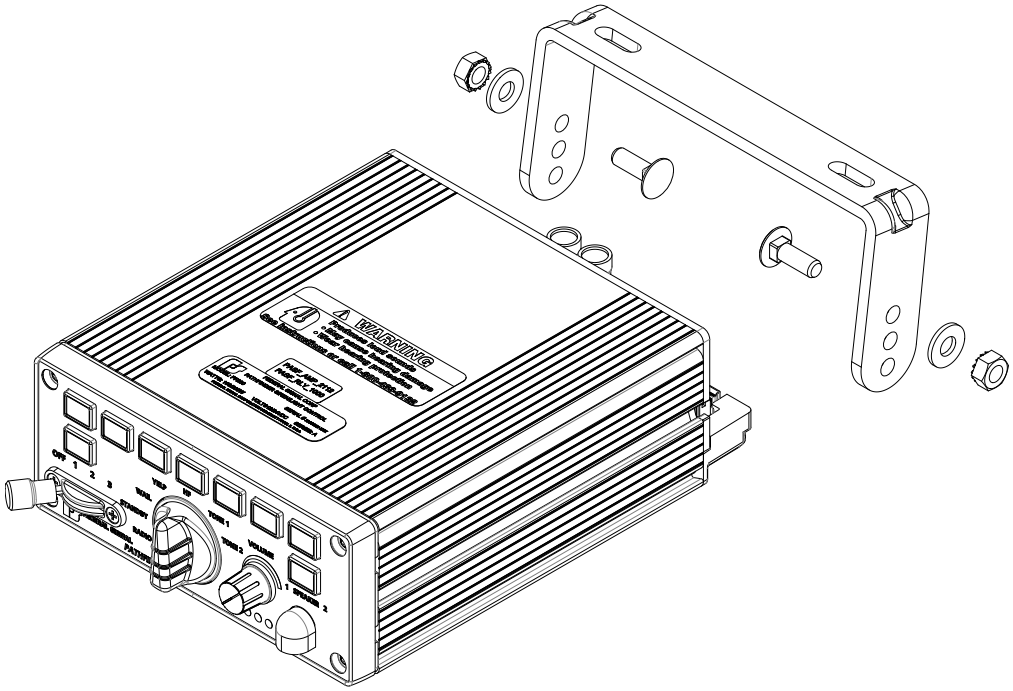

Mounting the Siren

To mount the siren:

1. Use the bracket as a template or use the dimensions shown in Figure 5 to mark the centers of the two mounting holes.
2. Choose a bit appropriate for the installer-supplied mounting hardware and drill the center of the two mounting holes.
3. Mount the bracket with the installer-supplied mounting hardware.
4. Insert the 1/4-20 carriage bolts into the bracket and loosely install the 1/4-inch washers and Keps nuts.
5. Slide the siren onto the bracket assembly and tighten the 1/4-inch nuts. Do not overtighten.

Mounting the Control Head (PF 100R and PF200R)

The control head comes with two mounting brackets and mounting hardware.

To mount the control head:

1. Secure a bracket to the control head with the 6-32 by 1/4-inch Phillips screws and #6 lock washers (Figure 7 on page 25).
2. Using a 7/16-inch nut driver, secure the other bracket to the control head/ bracket assembly with the 1/4-20 by 3/4-inch hex head screws and 1/4-inch lock washers (Figure 8).
3. Use the mounting bracket as a template and scribe two drill position marks at the selected mounting location.

Figure 7 Bracket Attached to Back of Control Head

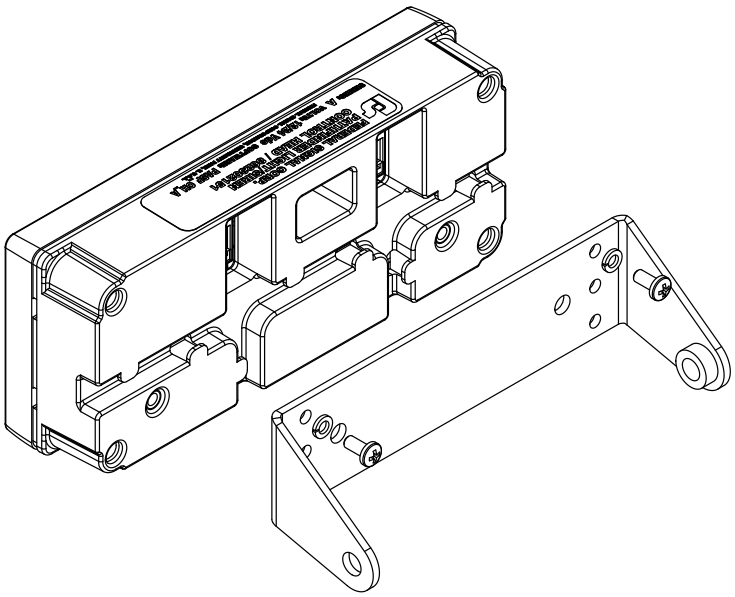

Figure 8 Brackets Attached to Control Head and Mounting Surface

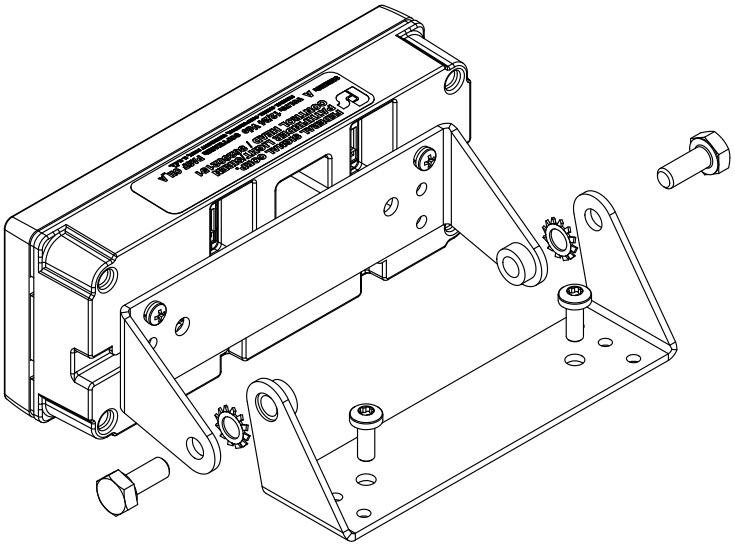

4. With an 11/64-inch bit, drill two mounting holes at the drill position marks.
5. Secure the mounting bracket to the mounting surface with the #10 thread-forming screws.
6. To adjust the angle of the control head, loosen the hinge screws, tilt the control head forward or backward, and then securely tighten the screws

Testing the Pathfinder® Installation

The Pathfinder is programmed with a default configuration that you can use to quickly check your initial installation system before you configure the system. Test all vehicle functions, including horn operation, vehicle safety functions, and vehicle lighting systems for proper operation. Ensure that the installation has not affected the vehicle operation or changed any vehicle safety functions or circuits. Do not test the sound and light system of the vehicle while driving. Operating the vehicle warning system may pose a hazard to the operator and other drivers if the system does not function as expected. Test the vehicle only in a controlled environment. After testing is complete, provide a copy of this manual to the instructional staff and all operating personnel.

Figure 9 Pathfinder Default Programming

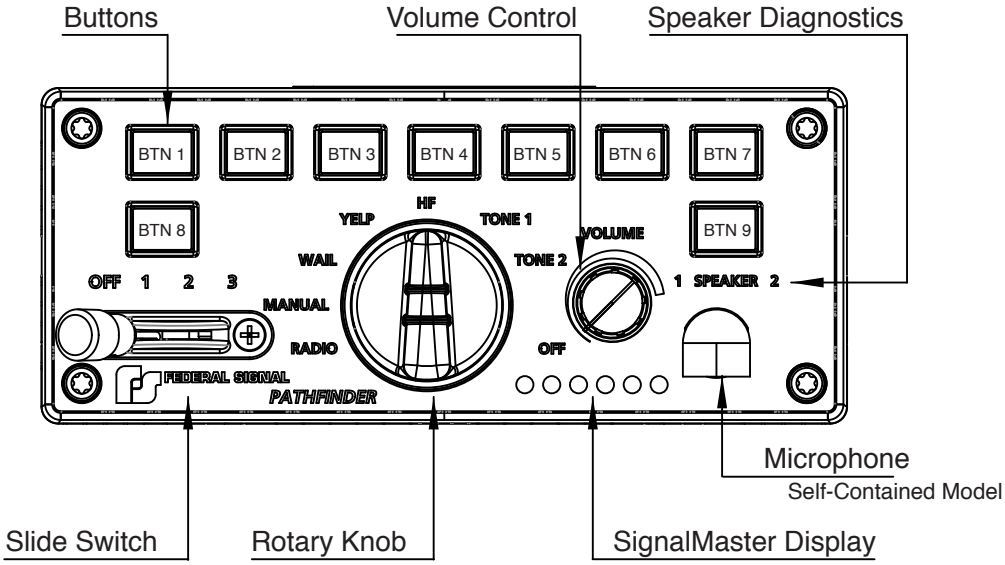

Table 7 Pathfinder® Switch Default Programming

Switch	Default Function
Slide Switch 1	Relays 1 and 2 ON Light Bar – Pattern 26, Front Cutoff ILS –Rear Pattern 26 CNSM –Rear Pattern 26
Slide Switch 2	Relays 1-4 ON Horn Ring Transfer Light Bar – Pattern 26 ILS – Front Pattern 23, Rear Pattern 26 CNSM – Front Pattern 23, Rear Pattern 26
Slide Switch 3	Relays 1-5 ON Horn Ring Transfer, Siren Enabled Light Bar – Pattern 27, Flash White Enable ILS – Front and Rear Pattern 25, Flash White Enable CNSM – Front and Rear Pattern 25, Flash White Enable
Rotary – Radio	Radio Re-Broadcast
Rotary – Manual	Standby
Rotary – Wail*	Wail Horn Ring Transfer
Rotary – Yelp*	Yelp Horn Ring Transfer
Rotary – HF*	Horn Siren Control
Rotary – Tone 1*	Priority
Rotary – Tone 2*	Dual Tone (Wail/Yelp)
Volume Switch	Turns Off Keypad Backlighting
*Siren Tones Dependent on Slide Switch 3	

Table 8 Pathfinder Button Default Programming

Button	Default Function
BTN 1	Step 1 – Left Alley (LB), Relay 7 ON Step 2 – Flood Left (LB/ILS/CNSM), Relay 7 ON
BTN 2	Step 1 –Takedown (LB/ILS/CNSM), Relay 9 ON Step 2 – Full Flood (LB/ILS/CNSM), Relay 9 ON
BTN 3	Step 1 – Right Alley (LB), Relay 8 ON Step 2 – Flood Right (LB/ILS/CNSM), Relay 8 ON
BTN 4	Dim (LB/ILS/CNSM)
BTN 5	Cruise (LB/ILS/CNSM)
BTN 6	Rear Cut (LB/ILS/CNSM)
BTN 7	Signal Master Step LRCO (LB/ILS/CNSM)
BTN 8	Air Horn
BTN 9	Relay 6 ON (GND) (8 Second Timer)

Table 9 Pathfinder Input Default Programming

Button	Default Function
Ignition	System Enable
Park	Siren Mute White Light Cutoff (LB/ILS/CNSM)
Horn Ring	Siren Tone Override/Control
Input 1	Remote SSW1 Activation
Input 2	Remote SSW2 Activation
Input 3	Remote SSW3 Activation
Input 4	Button 2, Step 2 On (Flood)

Horn Ring Operation

- Rotary Position Wail and SSW3 - 8 second Yelp tone and LB pattern 22 (intersection) override
- Rotary Position Yelp and SSW3 - 8 second Priority tone and LB pattern 22 (intersection) override
- Rotary Position HF and SSW3- Step through Wail, Yelp, Priority, double tap horn to turn off
- Rotary Position Manual and SSW3 - Momentary Air Horn override
- Rotary Position Tone1 and SSW3 - Momentary Air Horn override
- Rotary Position Tone2 and SSW3 - Momentary Air Horn override
- Any Tone Rotary Position and SSW2 - Momentary Air Horn override

NOTE: Horn Ring is transferred in SSW2 and SSW3 and horn presses will activate siren tones only in these slide positions. SSW off or SSW 1 will run the normal car horn on a horn press.

Dim Button Operation (BTN 4)

- Light bar dimming, will not turn on if in SSW3. If BTN 4 is active (ON), and SSW 3 is then selected, BTN 4 will be turned OFF.

Control Head Legends and Safety Messages

To complete the installation, the kit includes:

- A scored sheet of replaceable keypad legends that identify the functions of the control head buttons. Before installing the legends, configure the operation of the control head with the Convergence Configuration Software. (See the Convergence Network Software Configuration Manual, part no. 2562418.)
- A scored sheet of two labels with precautions to guard against hearing loss when operating the siren (part no. 1612339).
- A safety message card for operators of Federal Signal Sound and Light System (part no. 256B691).

Applying the Replaceable Control Head Legends

To apply the legends:

1. Peel the appropriate legends from the sheet and apply them to the control head buttons.
2. Verify that the label is properly tucked under the retaining ridge on the button.

Figure 10 Installing the Control Head Labels

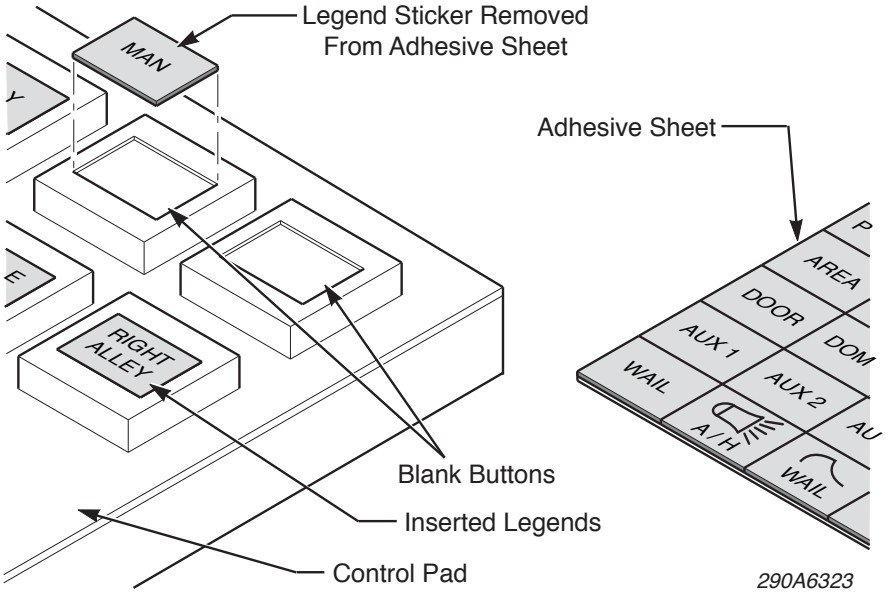

Distributing the Safety Message Card

Give the operator of the system the card entitled “Safety Message to Operators of Federal Signal Light/Sound Systems” (part no. 256B691) (Figure 11). The operator must read and understand the safety instructions and keep the card in the vehicle for reference.

Applying the Siren Safety Labels in the Vehicle

The kit includes a sheet of two labels with siren safety messages (part no. 1612339) (Figure 11). These labels must be installed in the vehicle in which the system is installed. Install these labels in areas that are clearly visible to operators and passengers. Do not install the labels in locations that would impair the operators’ ability to operate the vehicle. Never install the labels in areas where airbags may deploy.

Figure 11 Safety Message Card (left) and Siren Safety Labels (right)

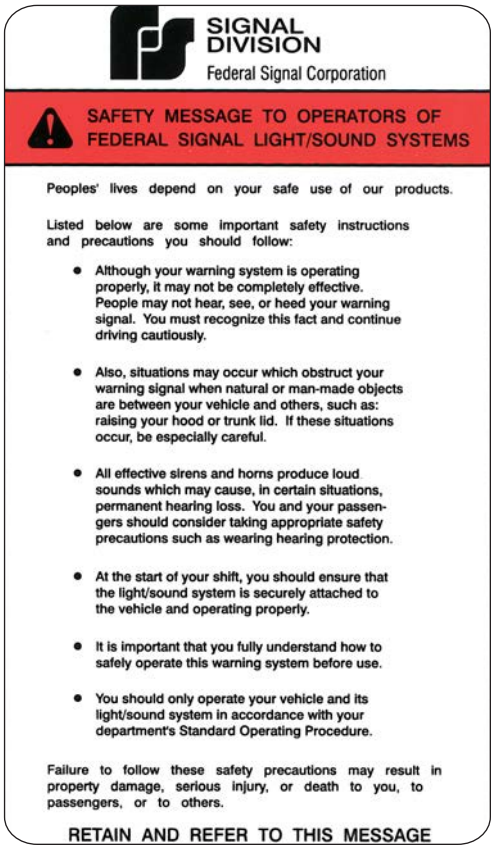

Safety Messages

Safety Messages to Personnel Servicing Federal Electronic Sirens

People's lives depend on your proper servicing of Federal Signal products. It is important to read and follow all instructions shipped with the products. Listed below are some other safety instructions and precautions you should follow:

- Read and understand all instructions in this manual before servicing the electronic siren or control head.
- To properly service an electronic siren or control head, you must have a good understanding of automotive electrical procedures and systems, along with proficiency in the installation and service of safety warning equipment. Always refer to the vehicle service manuals when performing service on a vehicle.
- Electronic repairs must be performed by a qualified and competent electronics technician.
- Your hearing and the hearing of others, in or close to your emergency vehicle, could be damaged by loud sounds. This can occur from short exposures to very loud sounds or from longer exposures to moderately loud sounds. For hearing conservation guidance, refer to federal, state, or local recommendations. OSHA Standard 1910.95 offers guidance on "Permissible Noise Exposure."
- All effective sirens and horns produce loud sounds (120 dB) that may cause permanent hearing loss. Always minimize your exposure to siren sound and wear hearing protection. Do not sound the siren indoors or in enclosed areas where you and others will be exposed to the sound.
- Do NOT connect this system to the positive terminal of the battery until servicing is complete and you have verified that there are no short circuits to ground.
- For the electronic siren to function properly, the ground connection must be made to the NEGATIVE battery terminal.
- After repair, test the electronic siren and speaker system to ensure that it is operating properly.
- Federal Signal siren amplifiers and speakers are designed to work together as a system. Combining a siren and speaker from different manufacturers may reduce the warning effectiveness of the siren system and may damage the components. Verify or test your combination to make sure the system works together properly and meets both federal, state and local standards or guidelines. Failure to follow all safety precautions and instructions may result in property damage, serious injury, or death.

Servicing the Pathfinder

Federal Signal recommends that the siren be returned to your local distributor or Federal Signal for service. External components, such as cabling, are available as replacement parts. (See Table 7.) Except the slide switch in the siren, there are no other user-serviceable parts within the unit. After servicing the system, test it to ensure that it is operating properly.

Replacing the Slide Switch

The slide switch can be removed from the siren without removing the siren from the vehicle in most installations.

NOTICE

STATIC-SENSITIVE DEVICE: The light bar circuitry can be damaged by electrostatic discharge (ESD). Follow anti-static procedures when removing the slide switch.

Figure 12 Keypad Removal

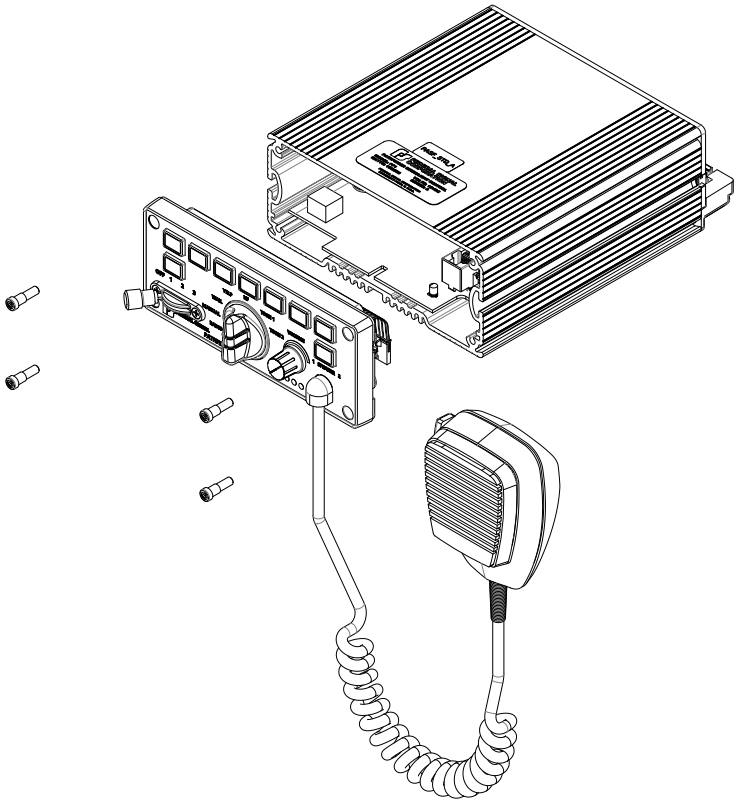

To replace the slide switch:

1. Use a T20 Torx driver to remove the four 8-32 shoulder screws securing the keypad to the extrusion (Figure 12).
2. Disconnect the ribbon cable and microphone lead from amp PCBA.
3. Gently unsnap the siren bezel from the keypad (Figure 13).

4. Note the orientation of the slide switch knob. Use a 1/64-inch hex key wrench to loosen the set screw securing the knob to the shaft.
5. Remove the two #4-40 by 5/16-inch Phillips head screws securing the slide switch bezel to the control head assembly. Unplug and remove the old switch.
6. Place the new switch assembly in position with the knob in the same orientation as the old switch.
7. Secure the switch bezel to the control head assembly with the two #4-40 by 5/16-inch Phillips head screws.
8. Reinstall the knob and tighten the set screw. Do not overtighten.
9. Plug the slide switch connector into the four-pin connector on the control head assembly.
10. Snap the siren bezel to the keypad, connect the ribbon cable and microphone lead to the amp PCBA, and secure the assembly with the four 8-32 shoulder screws. Do not overtighten the screws.

Figure 13 Slide Switch Replacement

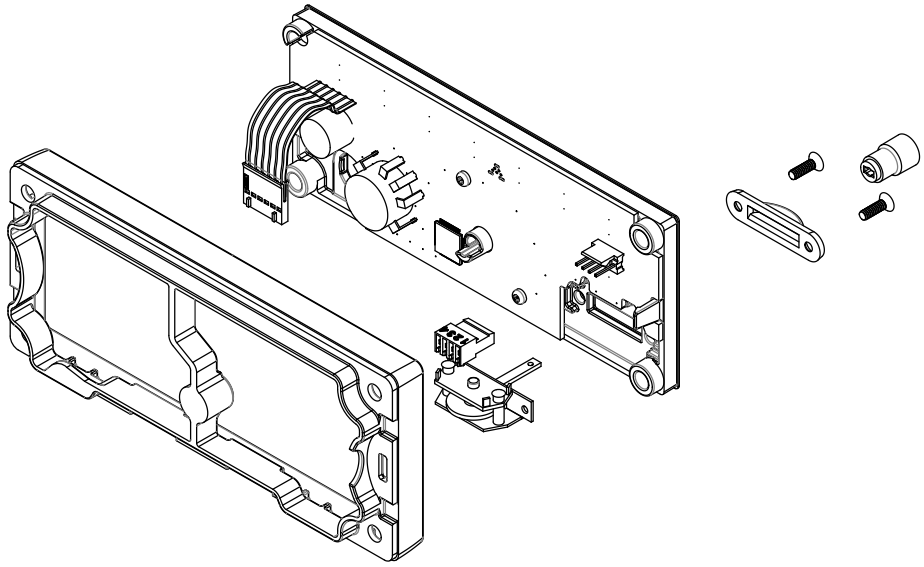

Table 10 Service Parts

Description	Part Number
Keypad Legends	8572294
Cable Assy, RS485, 25ft	1751357-02
Wire Assy, Relay, Pathfinder	17501359
Wire Assy, I/O, Pathfinder	17501360
Term, #8, 6AWG	19001363
Slide Switch Assy	122290
Bezel, Slide Switch	8573060
Knob, Aluminum, Slide Switch	85361185
Screw, #4-40 Flat Head, Phillips	7000259-06
Knob, Volume	141134
Keypad Assembly (PF100,200,PF100R,PF200R)	862302143
Keypad Assembly (PF200-RM)	862302143-03
Screw, 8-32 Shoulder, Fillister HD, 6 Lobe	70000738-10

Getting Technical Support and Service

For technical support and service, please contact:

Service Department
Federal Signal Corporation
Phone: 1-800-433-9132
Email: empserviceinfo@fedsig.com
www.fedsig.com

Getting Repair Service

The Federal Signal factory provides technical assistance with any problems that cannot be handled locally.

Any units returned to Federal Signal for service, inspection, or repair must be accompanied by a Return Material Authorization (RMA). Obtain a RMA from a local Distributor or Manufacturer's Representative.

Provide a brief explanation of the service requested, or the nature of the malfunction.

Address all communications and shipments to the following:

Federal Signal Corporation
Service Department
2645 Federal Signal Drive
University Park, IL 60484-3167

FEDERAL SIGNAL
Safety and Security Systems

2645 Federal Signal Drive
University Park, Illinois 60484-3167

www.fedsig.com

Customer Support
Police/Fire-EMS: 800-264-3578 • +1 708 534-3400
Work Truck: 800-824-0254 • +1 708 534-3400

Technical Support 800-433-9132 • +1 708 534-3400