FEDERAL SIGNAL
Safety and Security Systems

PA4000 Electronic Siren

Installation, Maintenance, and Service Manual

255292
REV. D1 1220
Printed in U.S.A.

Limited Warranty

This product is subject to and covered by a limited warranty, a copy of which can be found at www.fedsig.com/SSG-Warranty. A copy of this limited warranty can also be obtained by written request to Federal Signal Corporation, 2645 Federal Signal Drive, University Park, IL 60484, email to info@fedsig.com or call +1 708-534-3400.

This limited warranty is in lieu of all other warranties, express or implied, contractual or statutory, including, but not limited to the warranty of merchantability, warranty of fitness for a particular purpose and any warranty against failure of its essential purpose.

FEDERAL SIGNAL
Safety and Security Systems

2645 Federal Signal Drive
University Park, Illinois 60484-3167

www.fedsig.com

Customer Support
Police/Fire-EMS: 800-264-3578 • +1 708 534-3400
Work Truck: 800-824-0254 • +1 708 534-3400

Technical Support 800-433-9132 • +1 708 534-3400

Contents

Tables

Figures

Safety Messages for Installers and Operators

For your safety, read and understand this manual thoroughly before installing, operating, and servicing the e-Q2B Siren Amplifier. The safety messages presented in this section and throughout the manual are reminders to exercise extreme care at all times. In addition, read and understand the safety instructions to installers (doc. no. 256A692), and keep it close at hand for reference.

To download copies of this manual, go to www.fedsig.com or call the Federal Signal Service Department at 1-800-433-9132, 7 a.m. to 5 p.m., Monday through Friday (CT).

Safety Messages to Installers of Federal Signal Sound/Light Systems

⚠ WARNING

People's lives depend on your proper installation and servicing of Federal Signal products. It is important to read and follow all instructions shipped with this product. Listed below are some other important safety instructions and precautions you should follow.

Before Installation

Qualifications

- To properly install an electronic siren, you must have a good understanding of automotive electrical procedures and systems, along with proficiency in the installation and service of safety warning equipment. Always refer to the vehicle's service manuals when performing equipment installations on a vehicle.

Sound Hazards

- Your hearing and the hearing of others, in or close to your emergency vehicle, could be damaged by loud sounds. This can occur from short exposures to very loud sounds, or from longer exposures to moderately loud sounds. For hearing conservation guidance, refer to federal, state, or local recommendations. OSHA Standard 1910.95 offers guidance on "Permissible Noise Exposure."
- All effective sirens and horns produce loud sounds (120 dB) that may cause permanent hearing loss. Always minimize your exposure to siren sound and wear hearing protection. Do not sound the siren indoors or in enclosed areas where you and others will be exposed to the sound.
- Federal Signal siren amplifiers and speakers are designed to work together as a system. Combining a siren and speaker from different manufacturers may reduce the warning effectiveness of the siren system and may damage the components. You should verify or test your combination to make sure the system works together properly and meets federal, state and local standards or guidelines.

During Installation

- Do NOT get metal shavings inside the product. Metal shavings in the product can cause the system to fail. If drilling must be done near the unit, place an ESD-approved cover over the unit to prevent metal shavings from entering the unit. Inspect the unit after mounting to ensure that there are no shavings present in or near the unit.

- Do NOT connect this system to the vehicle battery until ALL other electrical connections are made, mounting of all components is complete, and you have verified that no shorts exist. If wiring is shorted to vehicle frame, high current conductors can cause hazardous sparks, resulting in electrical fires or flying molten metal.
- Make sure the siren amplifier and speaker(s) in your installation have compatible wattage ratings.
- In order for the electronic siren to function properly, the ground connection must be made to the NEGATIVE battery terminal.
- Sound output will be severely reduced if any objects are in front of the speaker. If maximum sound output is required for your application, ensure that the front of the speaker is clear of any obstructions.
- Install the speaker(s) as far forward on the vehicle as possible in a location that provides maximum signaling effectiveness and minimizes the sound reaching the vehicle's occupants. Refer to the National Institute of Justice guide 500-00 for further information.
- Mounting the speakers behind the grille will reduce the sound output and warning effectiveness of the siren system. Before mounting speakers behind the grille, make sure the vehicle operators are trained and understand that this type of installation is less effective for warning others.
- Sound propagation and warning effectiveness will be severely reduced if the speaker is not facing forward. Carefully follow the installation instructions and always install the speaker with the projector facing forward.
- Do NOT install the speaker(s) or route the speaker wires where they may interfere with the operation of air bag sensors.
- Installation of two speakers requires wiring speakers in phase.
- Never attempt to install aftermarket equipment that connects to the vehicle wiring without reviewing a vehicle wiring diagram available from the vehicle manufacturer. Ensure that your installation will not affect vehicle operation and safety functions or circuits. Always check vehicle for proper operation after installation.
- Do NOT install equipment or route wiring or cord in the deployment path of an airbag.
- If a vehicle seat is temporarily removed, verify with the vehicle manufacturer if the seat needs to be recalibrated for proper air bag deployment.
- Locate the control head so the vehicle, controls, and microphone can be operated safely.
- When drilling into a vehicle structure, enure that both sides of the surface are clear of anything that could be damaged.

After Installation

- After installation, test the emergency warning system to ensure that it is operating properly.
- Test all vehicle functions, including horn operation, vehicle safety functions, and vehicle light systems, to ensure proper operation. Ensure that installation has not affected vehicle operation or changed any vehicle safety function or circuit.
- After testing is complete, provide a copy of these instructions to the instructional staff and all operating personnel.
- File these instructions in a safe place and refer to them when maintaining or reinstalling the product.

Failure to follow all safety precautions and instructions may result in property damage, serious injury, or death.

RETAIN AND REFER TO THESE MESSAGES

Safety Messages to Operators of Federal Signal Sound/Light Systems

⚠ WARNING

People's lives depend on your safe operation of Federal Signal products. It is important to read and follow all instructions shipped with the products. Listed below are some other important safety instructions and precautions you should follow.

- Do not attempt to activate or deactivate the controls of the emergency warning system while driving in a hazardous situation.
- Although your warning system is operating properly, it may not be completely effective. People may not see, hear, or heed your warning signal. You must recognize this fact and continue to drive cautiously.
- Situations may occur that obstruct your warning signal when natural and man-made objects are between your vehicle and others, such as raising your hood or trunk lid. If these situations occur, be especially careful.
- All effective sirens and horns produce loud sounds that may cause, in certain situations, permanent hearing loss. You and your passengers should consider taking appropriate safety precautions, such as wearing hearing protection.
- The effectiveness of an interior mounted warning light depends on the clarity, the tinting, and the angle of the glass it is being placed behind. Tinting, dirt, defects, and steeply angled glass reduce the light output of the warning light. This may reduce the effectiveness of the light as a warning signal. If your vehicle has dirty, tinted, or steeply angled glass, use extra caution when driving your vehicle or blocking the right of way with your vehicle.
- In order to be an effective warning device, this product produces bright light that can be hazardous to your eyesight when viewed at a close range. Do not stare directly into this lighting product at a close range, or permanent damage to your eyesight may occur.

- It is important that you fully understand how to safely operate this warning system before use.
- Operate your vehicle and its light/sound system in accordance with your department's Standard Operating Procedures.
- If a selected function does not perform properly or if any of the lamps remain illuminated when the control is off, disconnect the power connector from the control unit and contact the nearest service center.
- At the start of your shift, ensure that the entire warning light system and the siren system is securely attached and operating properly.
- Suction cup mounting is for temporary applications only. The unit should be removed from the window and stored securely when not in use. Temperature changes and sunlight can cause suction cups to lose holding power. Periodically check the unit to be sure the suction cups have a firm grip on the mounting surface. An improperly secured light could fall off of the vehicle causing injury and damage.
- The holding power of magnetic mounting systems is dependent upon surface finish, surface flatness, and thickness of the steel mounting surface. Therefore, to promote proper magnetic mounting:
  - Keep mounting surface and magnets clean, dry, and free of foreign particles that prevent good surface contact.
  - Ensure that mounting surface is flat.
  - Do not use a magnet mounting system on vehicles with vinyl tops.
  - To prevent sliding of light assembly on mounting surface, avoid quick acceleration and hard stops.

Failure to follow these precautions may result in property damage, serious injury, or death.

Introduction

The Federal Model PA4000 is a precision built, efficient and economical full-featured electronic siren of advanced design. It provides wail, yelp and priority siren tones, as well as the Tap II feature, public address (PA), radio rebroadcast and an air horn sound.

The siren may be installed in negative ground vehicles with 12-volt electrical systems. It is protected against failure modes (including reversed polarity) by a fuse that is replaceable without tools. No components protrude from the bottom of the siren to interfere with mounting arrangements.

The siren is made up of an Amplifier and a Control Head. The Amplifier is suitable for mounting in a dry, adequately ventilated location, while the Control Head is designed for flush mounting in the vehicle interior. Communication between the two units is via an RJ45 telephone connector.

A noise cancelling microphone is wired in to prevent loss or theft. It provides high quality voice reproduction without feedback (squeal). The microphone push-to-talk switch overrides any siren signal for instant PA use. PA and radio volume are preset at the factory for maximum gain.

The Model PA4000 is designed to drive one or two 100-watt speakers. Using two 100-watt speakers will provide maximum traffic clearing power.

The Tap II feature allows the driver to change the siren sound via the vehicle's horn ring or any remotely mounted switch.

A horn ring switch allows the driver to determine the function of the horn ring. LEDs indicate when the vehicle horn is disabled and the horn ring is controlling either Tap II or the air horn tone.

Other special features of the Model PA4000 include:

- High degree of reliability is achieved through the use of a CMOS microprocessor and silicon output transistors.
- Control panel is illuminated with non-glare lighting.
- Newly designed printed circuit board provides improved performance and durability under a wide range of environmental conditions.
- AUX/OUT can drive an external relay for controlling other devices, such as warning lights.
- AUX/IN input can activate wail when the siren selector is in the manual position.
- Park-Siren Deactivator can deactivate siren tones when the vehicle is shifted into PARK.
- A diagnostic capability for speaker testing uses two LEDs for visual indication and four test tones for audible indication.

Table 1 Specifications

Input Voltage	11 Vdc to 16 Vdc
Polarity	Negative ground electrical systems only
Standby Current	250 mA (backlighting extinguished)
Operating Current (Control Head & Ampl.)	13 A ±1 A (at 13.6V with 5.5-ohm load)
Frequency Range	725 to 1600 Hz (nominal)
Cycle Rate	Wail- 14 cycles/min. Yelp- 180 cycles/min.
Voltage Output (approx.)	62 V_{P-P}
Audio Frequency Range	300 to 3 KHz
Harmonic Audio Distortion (300-3000Hz)	10% max. all power levels from 1/2 to 50 watts (frequency response ±3 dB)
Operating Temperature Range	-30°C to +65°C (-22°F to +149°F)
Control Head Dimensions (H x W x D)	2.9 x 6.3 x 1.5 inches (7.37 x 16.00 x 3.81 cm)
Amplifier Module Dimensions (H x W x D)	3.9 x 6.9 x 4.8 inches (9.91 x 17.53 x 12.19 cm)
Shipping Weight (approx.)	7 pounds (0.45 kg)

Kit Contents

After unpacking the kit, examine it for damage that may have occurred in transit. If the product has been damaged, file a claim immediately with the carrier stating the extent of damage. Carefully check all envelopes, shipping labels, and tags before removing or destroying them. Ensure all parts in the packing list are included in the shipment. If any parts are missing, call Federal Signal Customer Support at 1-800-264-3578, 7 a.m. to 5 p.m., Monday through Friday, CT.

Installing the Amplifier

NOTICE

UNIT REQUIRES AIR FLOW: The siren amplifier is cooled by an internal fan. Do not install it in areas where the air flow is restricted. Do not mount the unit near a heater duct or under the hood.

NOTICE

UNIT IS NOT WATERPROOF: The siren amplifier is NOT waterproof. The module must be mounted in a location that is sheltered from falling rain, snow, standing water, etc.

To install the amplifier:

1. Select a suitable mounting location for the amplifier. Some possible mounting locations are in the equipment cabinet, under the front seat, or in the trunk (under the rear deck, near the rear seat speakers if the vehicle is so equipped). Keep in mind that the control cable is 15 feet long.

2. Using the mounting holes on the amplifier as a template, scribe four drill position marks at the mounting location.

⚠ WARNING

DRILLING PRECAUTIONS: Before drilling holes, check the area into which you plan to drill to ensure that you do not damage vehicle components. All drilled holes should be deburred and all sharp edges should be smoothed. Additionally, all exterior drilled holes must be sealed with Motorcraft seam sealer T-A-2-B or equivalent to prevent the potential exposure to carbon monoxide or other potentially harmful fumes. Failure to observe this warning could cause serious injury or death.

3. The mounting hardware supplied in the siren accessory kit gives you a choice of mounting hardware: thread-forming screws with lockwashers or 1/4-20 cap screws with lockwashers and hex nuts. Consequently, the holes drilled in the mounting surface must be appropriate for the mounting screws selected. If the thread-forming screws are to be used, drill 3/16-inch holes at the drill position marks. Drill 9/32-inch holes at the position marks if you are using the 1/4-20 cap screws, lockwashers and nuts.

4. Secure the amplifier to the mounting surface using the mounting hardware, including lockwashers.

Installing the Control Head

⚠ WARNING

AIRBAG DEPLOYMENT: Do not install equipment or route wiring in the deployment path of an airbag. Failure to observe this warning will reduce the effectiveness of the airbag or potentially dislodge the equipment, causing serious injury or death.

⚠ WARNING

SEAT REMOVAL PRECAUTION: If a vehicle seat is temporarily removed, verify with the vehicle manufacturer if the seat needs to be recalibrated for proper airbag deployment. Failure to follow this warning cause serious injury or death.

The control head is designed to be flush mounted in any relatively flat surface.

To install the control head:

1. Select a location for the control head on the mounting surface that does not impair drivers' ability to safely drive the vehicle as they operate the siren. The selected location should afford good visibility and free accessibility to the Control Head controls.

2. Place the mounting template, supplied in the accessory kit, over the selected mounting location. Scribe a mark for each of the four mounting holes. Also scribe a cut mark along the heavy, dark line on the template.

NOTICE

DRILLING PRECAUTIONS: Before drilling holes, check the area into which you plan to drill to ensure that you do not damage vehicle components. All drilled holes should be deburred and all sharp edges should be smoothed.

3. Drill four 0.12-inch diameter (#31 drill) mounting holes at the marks scribed in step 2.

4. Using a keyhole saw or sabre saw, saw into the mounting surface at the cut mark scribed in step 2.

NOTE: Before completing the Control Head installation, perform the procedures in the Making the Electrical Connections section.

5. With all wiring connections complete, place the Control Head in position and secure to mounting surface with four (4) #6B Phillips head thread-forming screws (supplied).

Making the Electrical Connections

⚠ WARNING

AIRBAG DEPLOYMENT: Do not install equipment or route wiring in the deployment path of an airbag. Failure to observe this warning will reduce the effectiveness of the airbag or potentially dislodge the equipment, causing serious injury or death.

⚠ WARNING

SEAT REMOVAL PRECAUTION: If a vehicle seat is temporarily removed, verify with the vehicle manufacturer if the seat needs to be recalibrated for proper airbag deployment. Failure to follow this warning cause serious injury or death.

Control Cable

The control cable is designed to be installed between the amplifier and the control head. It consists of an eight-conductor cable terminated on both ends with RJ45 connectors.

To install the control cable:

1. Install the one end of the control cable to the mating connector on the control head.

2. Route the control cable toward the Amplifier.

⚠ WARNING

DRILLING PRECAUTIONS: Before drilling holes, check the area into which you plan to drill to ensure that you do not damage vehicle components. All drilled holes should be deburred and all sharp edges should be smoothed. Additionally, all exterior drilled holes must be sealed with Motorcraft seam sealer T-A-2-B or equivalent to prevent the potential exposure to carbon monoxide or other potentially harmful fumes. Failure to observe this warning could cause serious injury or death.

3. If routing the cable requires drilling a hole in sheet metal or other material, drill a 5/8-inch hole in the material. Install a 5/8-inch grommet (not supplied) or similar protective device in the hole to protect the cable from damage sharp edges could cause.

4. Install the other end of the control cable to the mating connector on the amplifier.

Connecting the Siren

The unit is supplied with an eleven-position connector to perform the electrical installation. User-supplied, 14-gauge red and black wires are required for the positive (+) and ground (-) connections. User-supplied, 18-gauge wires are required for the speaker, radio, horn switch, park switch, backlighting, and case ground connections.

To install a wire in the eleven-position connector, strip 1/4 inch of insulation from the end of the wire. Then insert the wire into the connector and tighten the screw at the appropriate connector position.

Speaker

The unit is designed to operate with one 11-ohm impedance speaker (100 W) or two 11-ohm impedance speakers (100 W).

When using one 100 W speaker, use 18-gauge wire and connect the speaker leads to positions 1 and 2 of the eleven-position connector as shown in Figure 1.

⚠ CAUTION

DO NOT WIRE IN PHASE: Improper diagnostic test indications will result if speakers are connected in parallel.

When using two 100 W speakers, they must be connected in phase. See Figure 1. On Federal Signal speakers, this can be accomplished (using 18 gauge wire) by connecting the two speaker leads marked “2” to position 1 of the eleven-position connector. Connect one of the speaker leads marked “1” to position 2 of the eleven-position connector. Connect the other speaker lead marked “1” to position 3 of the eleven position connector.

Figure 1 PA4000 wiring

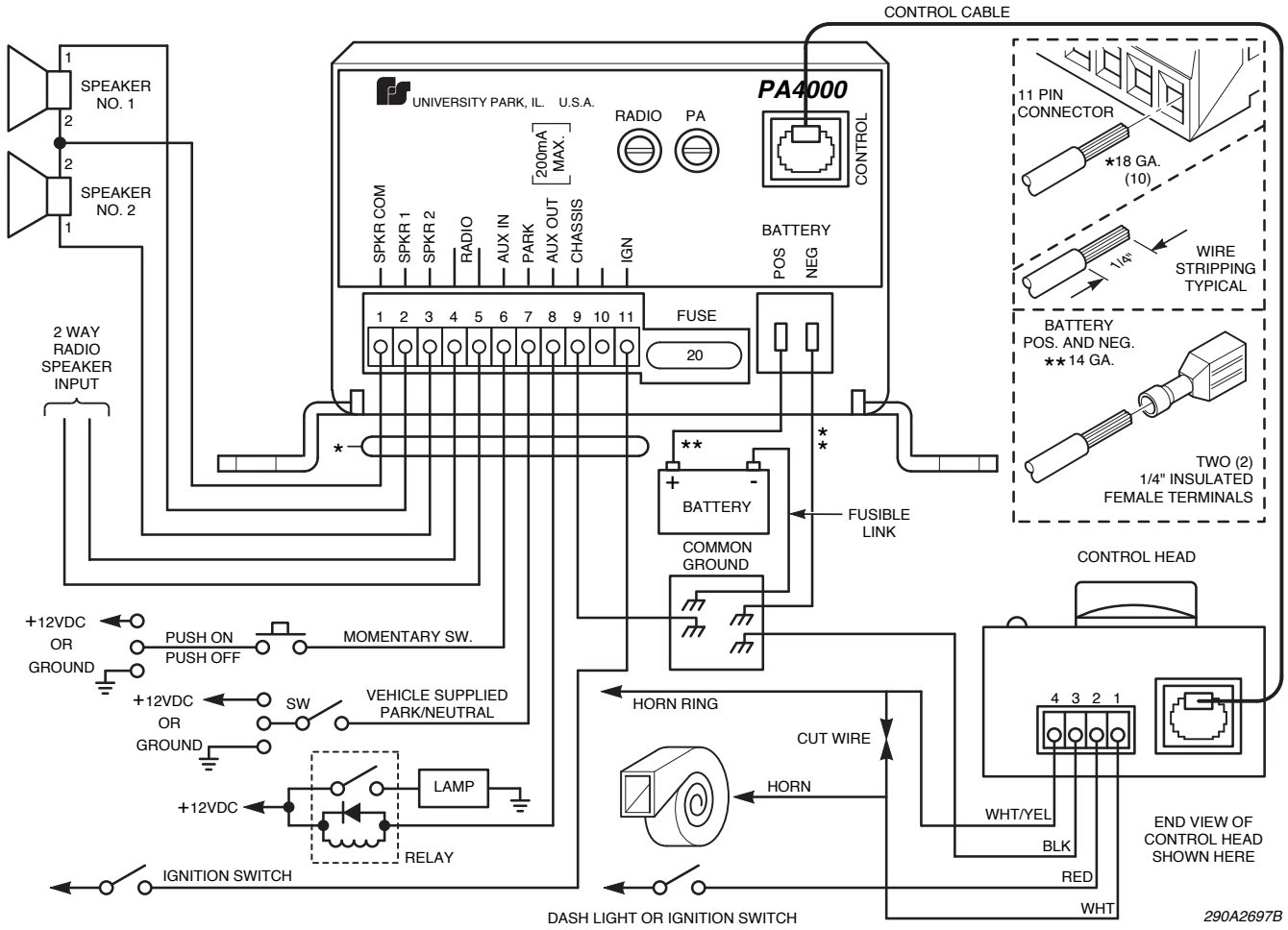

Radio

To allow incoming radio messages to be rebroadcast over the outside speakers, connect user-supplied, 18-gauge wires to positions 4 and 5 of the eleven-position connector. Connect the other end of the 18 gauge wires across the two-way radio's speaker. See Figure 1.

Aux In

This input will activate the wail siren tone when the siren selector is in manual.

To use this feature, connect a user-supplied, 18-gauge wire to position 6 of the eleven-position connector as shown in Figure 1.

Park-Siren Deactivator

IMPORTANT: It is the installer's responsibility to determine an appropriate location in the vehicle circuitry to connect this wire.

This feature automatically deactivates siren tones when the vehicle is shifted into Park.

To use this feature, connect a user-supplied, 18-gauge wire to position 7 of the eleven-position connector. Connect the other end of the wire to a vehicle circuit that is, depending on the vehicle, grounded or connected to battery positive (+) when the vehicle is shifted into Park. See Figure 1 on page 13.

Aux Out

NOTE: This output is activated any time the siren is operating in Wail, Yelp, or Priority mode.

This feature can be used to activate an external relay (200 mA maximum) for controlling warning lights.

To use this feature, connect a user-supplied, 18-gauge wire to position 8 of the eleven-position connector as shown in Figure 1 on page 13.

Ground

Connect a user-supplied, 18-gauge black wire to position 9 of the eleven-position connector. Connect the other end of the wire to the negative battery terminal.

Ignition

Connect a user-supplied, 18-gauge wire to position 11 of the eleven-position connector. Connect the other end of the wire to a vehicle circuit that is powered when the ignition switch is “on.”

Horn Ring Cable

The horn ring cable assembly, located in the accessory kit, is a four-wire cable terminating in an orange edge connector. This connector should be installed on the mating four-pin connector (J2) located on the Control Head PC board, and should be oriented so that the white wire is closest to the RJ45 phone jack. The following paragraphs describe the installation of the leads at the other end of the horn ring cable.

Horn Ring

⚠ CAUTION

The horn ring transfer circuit of the siren is capable of switching a maximum of 10 amperes.

NOTE: An external relay is not required for horn ring operation.

If the horn ring will not be used to control siren operation, fold back and insulate the white and white/yellow wires in the power cable and disregard the procedure in this paragraph. However, in order to utilize the Tap II and horn ring controlled Air Horn features of the siren, the following procedure must be performed.

1. Locate the wire that connects the vehicle horn ring switch to the horn or horn relay. Cut this wire.

2. Splice the white/yellow wire in the horn ring cable to the horn ring side of the wire that was cut in step 1. Insulate the splice with a wire nut (supplied).

3. Splice the white wire in the horn ring cable to the horn side of the cut wire. Insulate the splice with a wire nut (supplied).

To connect the lamp:

1. Connect the red wire to the dash lights circuit or to a vehicle circuit that is powered when the ignition switch is “on.” This connection will supply power to the Control Head panel lights whenever the headlights are “on” or the vehicle ignition key switch is in the “on” position.

2. Connect the black wire to the negative battery terminal.

The Control Head can now be secured to the vehicle dashboard.

Amplifier Power Connections

When making the power connections to the PA4000, each wire must be terminated with an appropriate 1/4-inch female, insulated, quick-connect terminal. Complete the wiring to the unit as follows:

1. Crimp the 1/4-inch female terminals on one end of user-supplied, 14-gauge red and black wires. See Figure 1 on page 13. Connect the red wire to the “POS” Amplifier connection. Connect the black wire to the “NEG” Amplifier connection.

⚠ WARNING

DRILLING PRECAUTIONS: Before drilling holes, check the area into which you plan to drill to ensure that you do not damage vehicle components. All drilled holes should be deburred and all sharp edges should be smoothed. Additionally, all exterior drilled holes must be sealed with Motorcraft seam sealer T-A-2-B or equivalent to prevent the potential exposure to carbon monoxide or other potentially harmful fumes. Failure to observe this warning could cause serious injury or death.

2. If the amplifier is installed in the vehicle passenger compartment, drill a 5/8-inch hole in the vehicle firewall for the power and ground leads.

3. If necessary, drill a 5/8-inch hole in the vehicle firewall. Install a user-supplied 5/8-inch grommet, or similar device or material, to protect the wiring and cabling against damage from rough edges.

4. Route the leads from the amplifier to an area near the battery. (Do not connect to the battery at this time. If necessary, pass the lead through the 5/8-inch hole that was drilled in step 2.

5. Connect the black wire to the negative battery terminal. A secure mechanical and electrical connection is required.

Finishing the Installation

To finish the installation:

1. Plug the eleven-position connector into the mating connector on the unit, and apply pressure until it locks into place.

⚠ WARNING

FIRE HAZARD: If shorted to the vehicle frame, high current conductors can cause hazardous sparks, resulting in electrical fires or molten metal. DO NOT connect this system to the vehicle battery until ALL other electrical connections are made and mounting of all components is complete. Verify that no short circuits exist before connecting to the positive (+) battery terminal. Failure to follow this warning can cause a fire and may result in serious injury or death to you or others.

2. Connect the red (+) wire to the positive (+) terminal of the power source. A secure mechanical and electrical connection is required.

Testing the Installation

⚠ WARNING

SOUND HAZARD: All effective sirens and horns produce loud sounds (120 dB) that may cause permanent hearing loss. Always minimize your exposure to siren sound and wear hearing protection. Do not sound the siren indoors or in enclosed areas where you and others will be exposed to the sound.

After installation, test the electronic siren, including horn operation, to ensure that it is operating properly.

After testing is complete, provide a copy of this manual to all operating personnel.

Operating the Siren

All controls utilized during normal operation of the Model PA4000 are located on the Control Head. See Figure 2.

Figure 2 PA 4000 control head

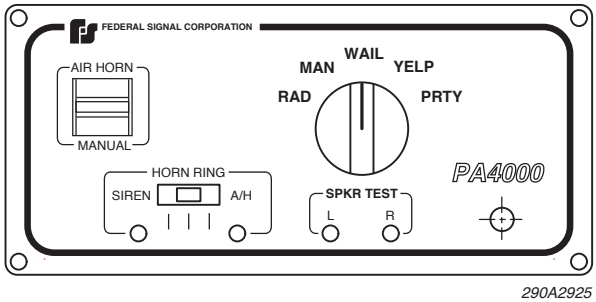

Selector Switch

The Selector switch is a five-position rotary switch used to select the mode of operation. The following are positions on the Selector switch.

- Radio: In this position, incoming radio messages are amplified by the siren and rebroadcast over the outside speaker.
- Man: In this position, it is possible to operate the siren by activating the AIR HORN/ MANUAL paddle switch. The siren can also be activated by means of an auxiliary switch, such as the horn ring button (refer to paragraph 4-6).
- Wail: In this position, the siren produces a continuous “wailing” sound up and down in frequency.
- Yelp: In this position, a continuous rapid “warbled” tone is generated.
- Priority: In this position, a continuous extremely rapid “warbled” tone is generated.

NOTE: Pressing the microphone push-to-talk switch will override any function and provide instant public address operation.

Horn Ring Switch

The horn ring switch determines the function of the vehicle horn ring.

1. In the center position, the vehicle’s horn will sound. Both red LEDs are extinguished.
2. In the left (Siren) position, the red LED on the left is illuminated. Pressing the vehicle’s horn ring activates the Tap II function and changes the audible siren sound. The vehicle horn will not sound.
3. In the right (A/H) position, the red LED on the right is illuminated. Pressing the vehicle’s horn ring sounds the air horn tone. The vehicle horn does not sound.

Air Horn/Manual Siren Switch

The Air Horn/Manual switch activates the electronic air horn sound (up) in any selected position except Radio, and the peak-and-hold sound (down) in the Manual position.

Tap II Functions

Tap II allows the driver to change the audible siren sound via the vehicle’s horn ring. This feature is especially effective for clearing traffic. The chart below demonstrates how the horn ring can be used to change the siren sound.

Table 2 Tap II Functions

Selector	First Horn	Second Horn
Switch	Ring Tap	Ring Tap
Position	Produces	Produces
Wail	Yelp	Wail
Yelp	Priority	Yelp

Press-and-Hold Function

NOTE: For the press and hold functions to operate with the horn ring, the Control Head horn ring switch must be in the Siren position.

Additional alternate sounds can be activated when the Selector switch is set to Manual or Priority. While pressing and holding the horn ring and the Selector switch set to Manual, the peak-and-hold siren sounds. In the Priority position, the air horn sounds. Releasing the horn ring causes the siren to revert back to the original function.

The Tap II functions can also be activated by pressing the Manual Siren switch.

Table 3 Tap II Functions

	First Tap	Second Tap
Selector	(Manual)	(Manual)
Wail	Yelp	Wail
Yelp	Priority (Hi-Lo)	Yelp
Priority	Air Horn	Air Horn

NOTE: Peak-and-hold siren and air horn are the “Press and Hold” features.

Aux in Function

If installed, set the selector to switch to the Manual position. Activate the installed auxiliary switch to sound the wail tone. To deactivate the wail tone, move the selector switch to the Wail position and back to the Manual position.

Aux out Function

If installed, this function activates warning lights any time wail, yelp, or priority is sounding.

Speaker Diagnostic Test

To test the speakers, set the selector switch to Radio. Press theAir Horn/Manual paddle switch down. Four rapid beeps sound and the yellow LEDs flash four times. Note that the yellow LEDs illuminate when a siren tone is sounding.

Park-Siren Deactivator

If installed, shifting the vehicle into Park silences the siren tones. Move the shift lever to another position to sound the siren tone.

PA and Radio Gain Adjustment

The PA4000 comes from the factory with the PA and Radio Gain set to maximum. To decrease the gain settings, proceed as follows while referring to Figure 1 on page 13.

1. Locate the PA and radio potentiometers on the logic PC board near the RJ45 jack.
2. Using a small flat blade screwdriver, rotate the appropriate potentiometer to the desired volume setting.

Ordering Replacement Parts

To order replacement parts, call Customer Support at 1-800-264-3578, 7 a.m. to 5 p.m., Monday through Friday (CT) or contact your nearest distributor.

Table 4 Replacement parts

Reference Designation	Description	Part Number
Q106, Q109	Transistor, TIP35C, NPN, Power	125B437B
F1	Fuse, 20A, 32V	148A142A
LP1, 2	Lamp, Panel	149A120
	Insulator (Q106, Q109)	235A150A
	Amplifier Power Circuit Board, PA4000 (with parts installed)	2001191A-01
	Amplifier Power Circuit Board, PA4000NY (with parts installed)	2005002A-02
	Amplifier Logic Circuit Board (with parts installed)	2005001B
	Control Head Circuit Board (with parts installed)	2001190A
	Chassis	85361107A
	Cover	85361103A
	Amplifier Assembly, PA4000	85361108A
	Amplifier Assembly, PA4000NY	85361108A-02
	Control Assembly	85361106A
	Accessory Kit	85361109A
	Microphone	258B577A-02
	Output Transformer	120258A

Getting Technical Support and Service

For technical support and service, please contact:

Service Department
Federal Signal Corporation
Phone: 1-800-433-9132
Email: empserviceinfo@fedsig.com
www.fedsig.com

Getting Repair Service

The Federal Signal factory provides technical assistance with any problems that cannot be handled locally.

Any units returned to Federal Signal for service, inspection, or repair must be accompanied by a Return Material Authorization (RMA). Obtain a RMA from a local Distributor or Manufacturer's Representative.

Provide a brief explanation of the service requested, or the nature of the malfunction.

Address all communications and shipments to the following:

Federal Signal Corporation
Service Department
2645 Federal Signal Drive
University Park, IL 60484-3167

FEDERAL SIGNAL
Safety and Security Systems

2645 Federal Signal Drive
University Park, Illinois 60484-3167

www.fedsig.com

Customer Support
Police/Fire-EMS: 800-264-3578 • +1 708 534-3400
Work Truck: 800-824-0254 • +1 708 534-3400

Technical Support 800-433-9132 • +1 708 534-3400