FEDERAL SIGNAL



Model 350

Vibratone® Horn

Model 350 Vibratone® Horn produces a loud tone by the electro-mechanical vibration of a diaphragm. Its compact size, loud output and heavy-duty construction makes Model 350 ideal for industrial and institutional signaling applications. It's popularly used for general alarming, start and dismissal noticing, coded paging and process control in noisy areas.

Model 350 is enclosed in a zinc die-cast housing and sealed with gray powder-coated paint with a stainless steel diaphragm.

FEATURES

- Available in 12VAC, 24VAC, 120VAC and 240VAC
- Coded or sustained tones
- Produces 100 dBa @ 10' (110 dBa @ 1m)
- Surface or flush mounting options
- Type 4X when installed with optional Weatherproof Back Box (Model WB) or Panel Mount Gasket Kit (Model K8435666A); Type 4X and Type 12 when installed with optional Surface Mount Trim Ring (Model TR). All 4X accessories are sold separately.
- CSA Certified
- UL and cUL Listed

MODEL	VOLTAGE	OPERATING CURRENT	DECIBELS 10'	1M
350-012-30	12VAC 50/60Hz	0.90 amps	94	104
350-024-30	24VAC 50/60Hz	0.90 amps	100	110
350-120-30	120VAC 50/60Hz	0.22 amps	100	110
350-240-30	240VAC 50/60Hz	0.09 amps	100	110

Vibratone® Horn (350)

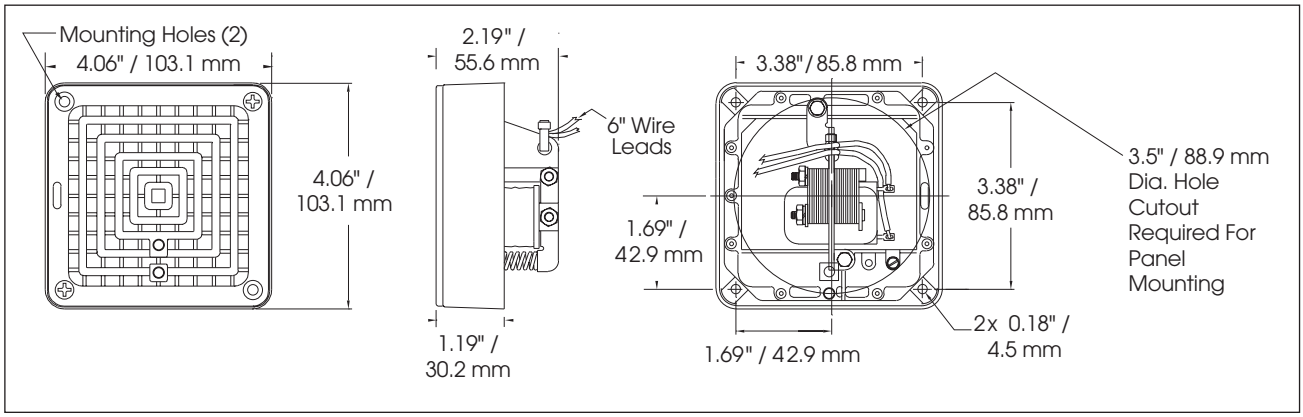

SPECIFICATIONS

Operating Temperature:	-65°F to 150°F	-54°C to 66°C
Duty Cycle:	5 minutes ON/5 minutes OFF	
Net Weight:	1.4 lbs	0.6 kg
Shipping Weight:	1.5 lbs	0.7 kg
Height:	4.06"	103.1 mm
Width:	4.06"	103.1 mm
Depth:	2.19"	55.6 mm

HOW TO ORDER

350 – 024 – 30

TYPE
350

VOLTAGE
012 (12VAC)
024 (24VAC)
120 (120VAC)
240 (240VAC)

REPLACEMENT PARTS

Description	Part Number
Volume Control Kit	K8435663B
Coil, 120VAC	KFC1516C

Optional Accessories below:


PR2-NM


WB


TR

OPTIONAL ACCESSORIES

Description	Part Number
Wall box for flush mounting stud, 4" block, or other shallow wall construction;4-3/8" square box; 2-7/8" deep; shipping weight 2 lbs (0.91 kg)	FB
Same as FB, but 3-13/16" deep for 6" x 8" concrete block, cinder block or other deep wall construction; shipping weight 3 lbs (1.36 kg)	FBL
Flush grille which attaches to the basic unit and serves as the cover of the plastered-in FB flush box; 6" H x 6"W x 1/8" D; shipping weight 1 lb (0.45 kg)	FG
Non-metallic double projector directs sounds to both sides when attached to 350/450E models; ideal for use in hallways; 4" H x 11-1/2" W x 4" D; shipping weight 1 lb (0.45kg)	PR2-NM
Stamped surface plate used for installations on plastered-in 4" outlet switch boxes for semi-flush mountings; 6"H x 6" W x 1/2" D; shipping weight 1 lb (0.45 kg)	SF
Gasketed trim ring allowing surface mount installations of unit while maintaining Type 12 and Type 4X enclosure rating	TR
Optional Panel Mounting Gasket Kit includes a gasket and hardware for surface or flush mounting the horn for Type 4X applications. Must be installed on a Type 4X rated enclosure to maintain rating.	K8435666A
Cast aluminum neoprene-gasketed weatherproof housing for outside use, complete with mounting lugs; tapped for 1/2", 3/4" conduit; 4 3/8" square box; 2" deep mounting lugs on 4 1/2" centers; shipping weight 1 lb (0.45 kg)	WB