FEDERAL SIGNAL



Models AM300 and AM302

AudioMaster® Public Address Speakers

Models AM300 and AM302 are rugged, transformer-coupled, re-entrant speakers for use in public address or paging applications. These 15- and 30-watt speakers feature a durable speaker cone and projector constructed of spun aluminum. The speaker wiring connections are enclosed in a dust- and moisture-proof, diecast aluminum compartment. All external surfaces are sealed with a Red or Gray powder coat paint.

The bottom of the the units contain two 1/2-inch conduit openings to accommodate inbound and outbound audio wiring. The unique shape of the projector provides a 60° sound dispersion. The projector is held in position with a Teflon®-coated lock ring that can be rotated 180° in order to obtain the desired sound distribution.

These speakers are UL Listed for "Fire Protective Signaling Use." An in-line capacitor (included) provides the isolation necessary for use in supervised systems. These can be used as supervised alarm notification systems or AudioMaster® CTS series amplifiers and the AudioRouter™ to complete an industrial grade public address system.

FEATURES

- 15 watt (AM300) or 30 watt (AM302)
- Transformer coupled
- 25 or 70 V_{rms}
- Re-entrant horn design
- Wall mount
- Indoor/outdoor use
- Type 3R, IP54 enclosure
- CSFM Approved for Model AM300 only
- UL Fire Listed

MODEL	POWER HANDLING	FREQUENCY RESPONSE	TRANSFORMER	POWER TAPS	BEAM WIDTH	SPL ON AXIS 10'	SPL ON AXIS 1m
AM300-*	15 watt	400-4000 Hz	25/70 V_{rms}	15, 9, 3, 1.5	60°	110 dBa	120 dBa
AM302-*	30 watt	400-4000 Hz	25/70 V_{rms}	30, 15, 7	60°	114 dBa	124 dBa

* Indicates housing color: (-R) for Red housing, leave blank for Gray

AudioMaster® Public Address Speakers (AM300 and AM302)

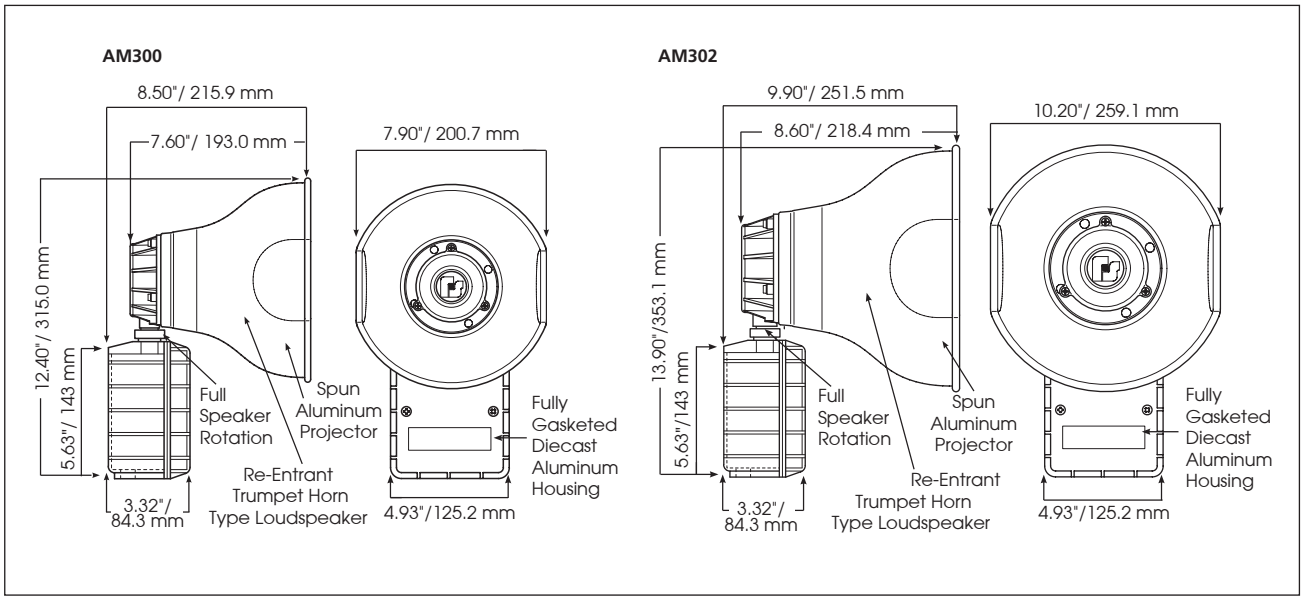

SPECIFICATIONS

AM300

Operating Temperature:	-67 F to 150 F	-55 C to 66 C
Net Weight:	4.85 lb	2.2 kg
Shipping Weight:	6.15 lb	2.79 kg
Height:	12.40"	315.0 mm
Width:	7.90"	200.7 mm
Depth:	8.50"	215.9 mm

AM302

Operating Temperature:	-67 F to 150 F	-55 C to 66 C
Net Weight:	7.2 lb	3.3 kg
Shipping Weight:	8.1 lb	3.67 kg
Height:	13.90"	353.1 mm
Width:	10.20"	259.1 mm
Depth:	9.90"	251.5 mm

OPTIONAL ACCESSORIES

Description	Part Number
Speaker Rotational Mounting Kit	SEL-KIT-RS

HOW TO ORDER

AM300 – **R**

TYPE
AM300 (15 watt)
AM302 (30 watt)

HOUSING COLOR
R Red
BLANK Gray

REPLACEMENT PARTS

Description	Part Number
15 W Speaker Assembly, Gray for AM300	K8593082A
15 W Diaphragm, Voice Coil, Butterfly Assembly for AM300	K8593035A
30 W Speaker Assembly, Gray for AM302	K8593103A
30 W Diaphragm, Voice Coil, Butterfly Assembly for AM302	K8590246A
Diaphragm Gasket for AM302	K8590243A
Housing, Gray for AM300/AM302	K8473021A
Housing Gasket for AM300/AM302	K288A043