FEDERAL SIGNAL



Model 302GC

# SelecTone® 30 W Amplified Speakers

Model 302GC SelecTone® Amplified Speaker is designed to produce crisp, clear tones, digital voice messages, and live public address in harsh environments with high ambient noise levels.

The speaker cone and projector are manufactured from rugged spun aluminum for enhanced durability. Internal components—including the circuitry, tone module, and gain control—are housed within a die-cast aluminum enclosure. All external surfaces feature a protective powder-coat finish, while dust- and moisture-resistant gaskets ensure reliable performance in harsh environmental conditions.

SelecTone Amplified Speakers are used individually or as part of a plant-wide emergency notification system. Model UTM Universal Tone Module with (32) tones, or model TM33-SD Custom Tone Module is plugged into a single SelecTone Amplified Speaker for stand-alone use or into a SelecTone Command Unit for plant-wide signaling.

For plant-wide signaling, a Connector Kit is installed into each SelecTone Amplified Speaker and wired to a central controller. SelecTone Command Units and CommCenter® Digital Message Centers broadcast tones, voice messages, melodies, and live public address to an unlimited number of SelecTone Amplified Speakers.

Typical applications for SelecTone include emergency warning, plant evacuation, start and dismissal, public address, and process control signaling.

## FEATURES

- Available in 24 Vac/dc, 120 Vac, and 240 Vac
- Built-in gain control, adjustable between 0 dBa to 114 dBa at 10' (0 dBa to 124 dBa at 1 m)
- Cast copper-free aluminum housing, spun aluminum projector
- Digital signal amplification
- Fused input and output
- Indoor/outdoor use
- Type 3R, IP54 enclosure
- CSFM Approved
- UL and cUL Listed

| MODEL | VOLTAGE | OPERATING CURRENT | STANDBY CURRENT[1]* | DECIBELS 10' | DECIBELS 1 m |
|---|---|---|---|---|---|
| **302GC-024** | 24 Vdc | 1.00 A | 50 mA | 114 | 124 |
| | 24 Vac 50/60 Hz | 1.40 A | 100 mA | 114 | 124 |
| **302GC-120** | 120 Vac 50/60 Hz | 0.30 A | 30 mA | 114 | 124 |
| **302GC-240** | 240 Vac 50/60 Hz | 0.15 A | 35 mA | 114 | 124 |

[1]* When used as a powered loud speaker

# SelecTone® 30 W Amplified Speakers (302GC)

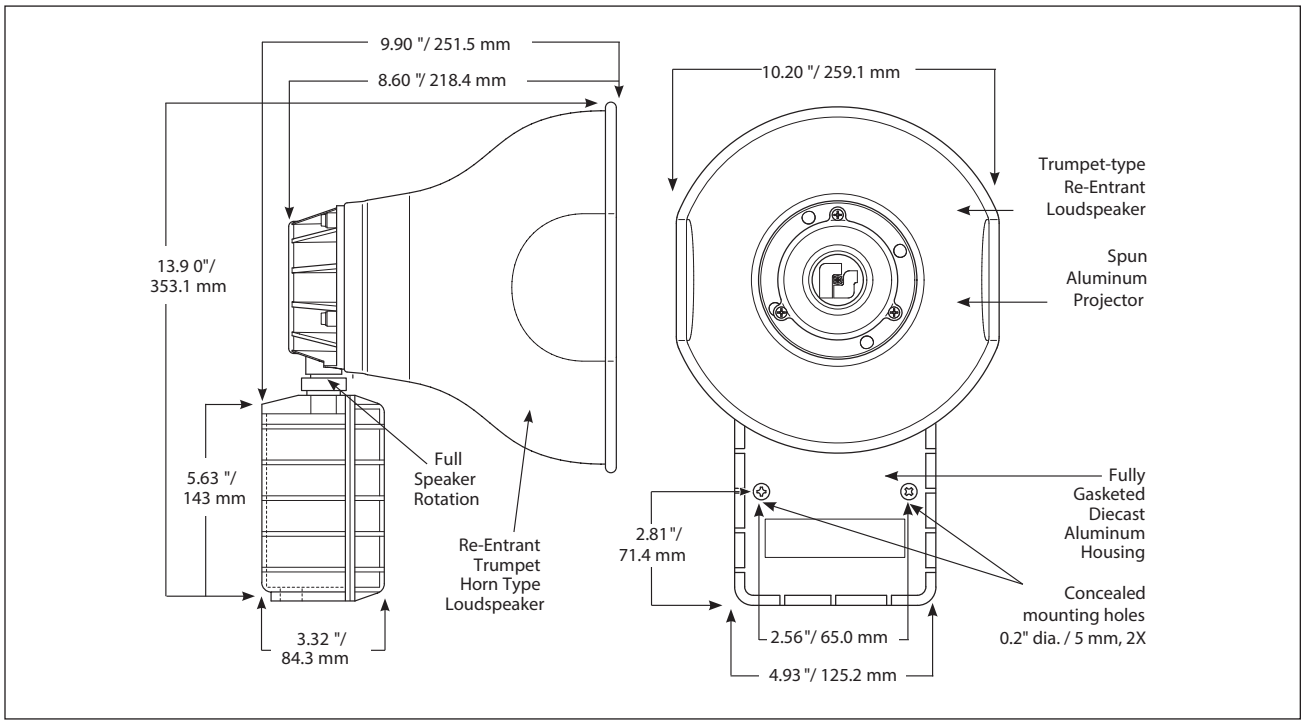


## SPECIFICATIONS

| | |
|---|---|
| Operating Temperature: | -67° to 150°F (-55° to 66°C) |
| Rated Power: | 30 W |
| Net Weight: | |
| 24 Vac/dc | 7.5 lb (3.4 kg) |
| 120/240 Vac | 7.5 lb (3.4 kg) |
| Shipping Weight: | |
| 24 Vac/dc | 8.9 lb (4.0 kg) |
| 120/240 Vac | 8.9 lb (4.0 kg) |
| Height: | 13.90 in (353.1 mm) |
| Width: | 10.20 in (259.1 mm) |
| Depth: | 9.90 in (251.5 mm) |

## HOW TO ORDER

**1. Select Model**

**2. Select Required Module (sold separately)**

A. For stand-alone operation, select Tone Module:

| | |
|---|---|
| Universal Tone Module | **UTM** |
| Custom Tone Module | **TM33-SD** |

B. For use in systems*, select Connector Kit:

| | |
|---|---|
| 25 $V_{rms}$, 1 $V_{rms}$ | **AM25CK** |
| 70 $V_{rms}$, 1 $V_{rms}$ | **AM70CK** |
| 10 $V_{rms}$, 1 $V_{rms}$ | **300CK** |
| 2.7 $V_{rms}$, 1 $V_{rms}$ | **T-300CK** |
| 1 $V_{rms}$, 1 $V_{rms}$ | **E-300CK** |

*Call the factory for design assistance.
Reference www.fedsig.com for list of tones in modules.

## ACCESSORIES

| Description | Part Number |
|---|---|
| Speaker Rotational Mounting Kit | **SEL-KIT-RS** |

## REPLACEMENT PARTS

| Description | Part Number |
|---|---|
| PCBA, Amp Motherboard, 30 W, 24 Vac/dc | **K2001961B-03** |
| PCBA, Amp Motherboard, 30 W, 120/240 Vac | **K2001961B-02** |
| Amplifier PCBA, 30 W | **K2005502D-02** |
| XFMR, 30 W, 120 Vac, 1.8 A | **K120846A** |
| XFMR, 30 W, 240 Vac, 1.8 A | **K120856A** |
| Gasket, Diaphragm, 30 W | **K8590243A** |
| Gasket, Housing, 30 W | **K288A043** |
| Housing, 30 W, Gray | **K8473021A** |
| Speaker Assembly, 30 W | **K8593103A** |
| Voice Coil, 30 W | **K8590246A** |
| Cover, Gray | **K8473022A** |

**302GC – 024**

**TYPE**
**302GC**

**VOLTAGE**
**024** (24 Vac/dc)
**120** (120 Vac)
**240** (240 Vac)