REV.	ITEM	PART NO.	DESCRIPTION	LPX24D QTY.	LPX32D QTY.	LPX45D QTY.	LPX53D QTY.	LPX53DNC QTY.	LPX61D QTY.	LPX61DNC QTY.	LPX70D QTY.	LPX70DNC QTY.
	1	8653100	BASE, END	-	-	2	2	2	2	2	2	2
	2	8653110	GASKET, END	2	2	2	2	2	2	2	2	2
	3	8583020-01	GASKET, DOME, CLEAR	3.55 FT	6.65 FT	10.70 FT	13.80 FT	13.80 FT	16.90 FT	16.90 FT	20.00 FT	20.00 FT
	4	231313	PLUG, .875 HOLE	1	1	1	1	1	2	2	2	2
	5	77700080	BUSHING, .75" HOLE	-	-	-	-	-	1	1	1	1
	6	228134	GROMMET, SPLIT WEB	1	1	1	1	1	-	-	-	-
	7	7004031-26	BOLT, 1/4-20, CARR., DOGPOINT	4	4	8	10	10	12	12	14	14
	8	8653109-19	EXTRUSION, 19"	1	-	-	-	-	-	-	-	-
		8653109	EXTRUSION, 39"	-	1	1	-	-	-	-	-	-
		8653109-27	EXTRUSION, 27"	-	-	-	-	-	-	-	-	-
		8653109-48	EXTRUSION, 48"	-	-	-	1	1	-	-	-	-
		8653109-56	EXTRUSION, 56"	-	-	-	-	-	1	1	-	-
		8653109-64	EXTRUSION, 64"	-	-	-	-	-	-	-	1	1
	9	7011A122-06	SCR,#10 TYP.B HEX W.HD.TH	2	2	2	2	2	3	3	3	3
	10	8542A028-03	CLAMP,CABLE 7/16 NOMINAL	1	1	1	1	1	1	1	1	1
	11	7017A034-06	SCREW,HI-LO9,HEX.HD. #10	1	1	1	1	1	-	-	-	-
	12	8653179	BLACKOUT,CNTR SECTION,LGD	-	-	-	-	1	-	2	1	3
	13	8653247	BIG BRD,END,LGD/LPX (REF)	2	2	2	2	2	2	2	2	2
	14	8653248	BIG BRD,INT,LGD/LPX (REF)	-	2	2	2	2	2	2	2	2
	15	8653249	BIG BRD,CNTR,LGD/LPX (REF)	-	-	-	1	-	2	-	2	-
	16	8653101-XX	TOP, END (CONFIG.)	-	2	2	2	2	2	2	2	2
	17	81462346	NAMEPLATE,LPX	2	2	2	2	2	2	2	2	2
	18	7065071	NUT,BARREL, 1/4-20 SS BLK	4	8	10	10	12	12	12	14	14
	19	7067016	O-RING,5/16 ID,AS568A-011	4	8	10	10	12	12	12	14	14
	20	8653102	BASE,CENTER	-	-	1	1	2	2	2	3	3
	21	8653103-XX	TOP, CENTER (CONFIG)	-	1	-	1	1	2	2	3	3
	22	81461452	NAMEPLATE, MODEL NO.	1	1	1	1	1	1	1	1	1
	23	81462345	NAMEPLATE,PATENT,LPX	1	1	1	1	1	1	1	1	1
	24	1612431-06	LABEL,SAE,06	1	1	1	1	1	1	1	1	1
	25	161A463	LABEL, WARNING	1	1	1	1	1	1	1	1	1
	26	1612358	LABEL,WARNING,EYE DAMAGE	2	2	2	2	2	2	2	2	2
	27	2881407	GASKET	1	1	2	2	3	3	4	4	
	28	8653175	BASE, END, 12", LEGEND	2	-	-	-	-	-	-	-	-
	29	8653176-XX	TOP, END, 12" (CONFIG.)	2	2	-	-	-	-	-	-	-

NOT CURRENTLY AVAILABLE

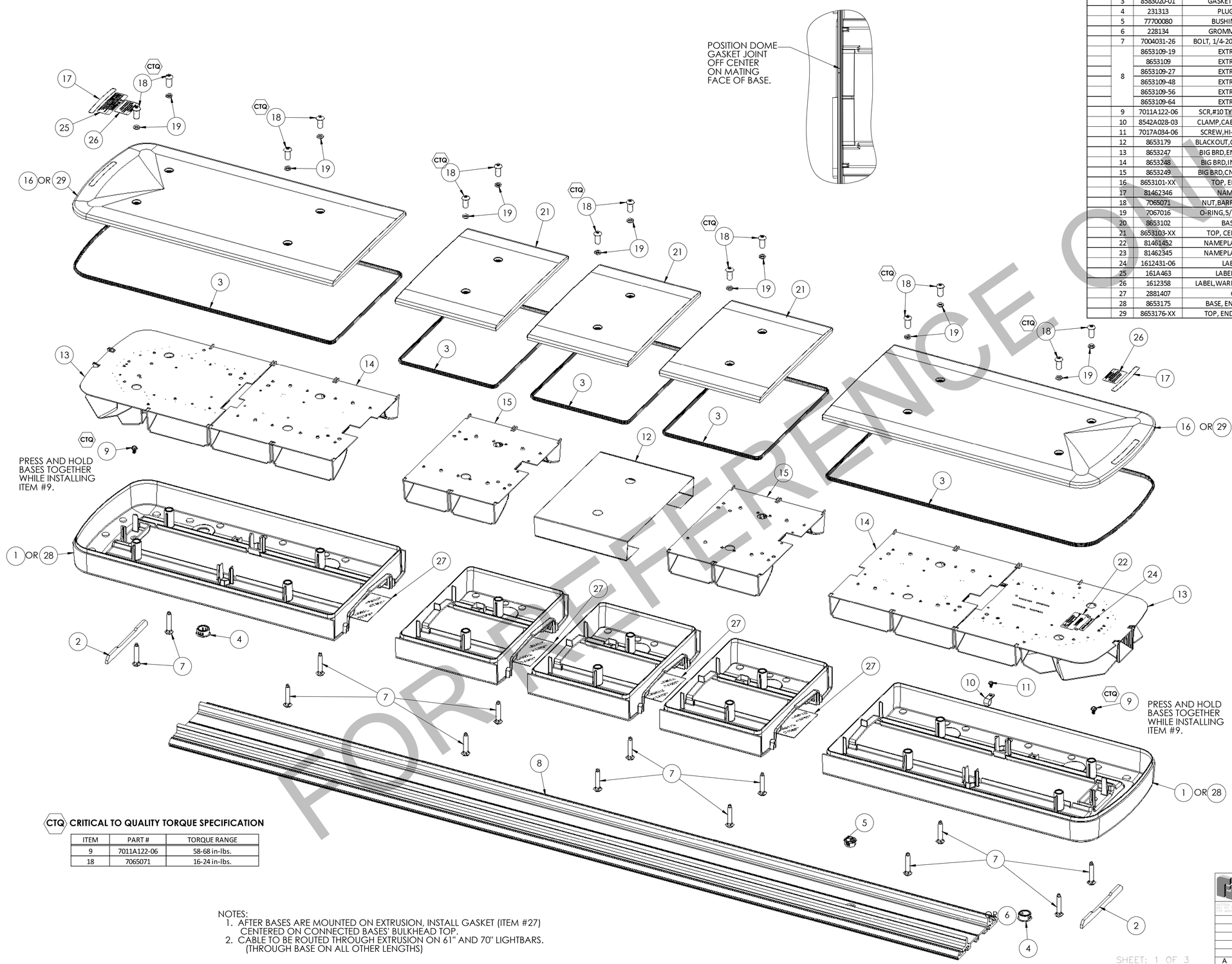

FOR REFERENCE ONLY

CTQ CRITICAL TO QUALITY TORQUE SPECIFICATION

ITEM	PART #	TORQUE RANGE
9	7011A122-06	58-68 in-lbs.
18	7065071	16-24 in-lbs.

NOTES:
1. AFTER BASES ARE MOUNTED ON EXTRUSION, INSTALL GASKET (ITEM #27) CENTERED ON CONNECTED BASES' BULKHEAD TOP.
2. CABLE TO BE ROUTED THROUGH EXTRUSION ON 61" AND 70" LIGHTBARS. (THROUGH BASE ON ALL OTHER LENGTHS)

SHEET	INFORMATION
1	SHELL PARTS/BREAKDOWN
2	INTERNAL WIRING FOR STANDARD BARS
3	INTERNAL WIRING FOR NO-CENTER (DNC) BARS
3	WIRING FOR CENTER UPGRADE KIT

SHEET: 1 OF 3
UNITS: INCHES

FEDERAL SIGNAL SAFETY & SECURITY GROUP
1645 FEDERAL SIGNAL DRIVE
UNIVERSITY PARK, IL 60484

REV.	CHANGE	DATE	BY
A	REL TO PROD ECR #11-8453	1/31/12	RM

NAME: FINAL ASSY., LPXD
FINISH: N/A
REMOVE BURRS, SHARP CORNERS AND EDGES
MATERIAL: N/A
SCALE AT D SIZE: NONE
THIRD ANGLE PROJECTION
TOLERANCE MEASURE: RF
DRAWN BY: RM DATE: 1/31/12
CHK'D. BY: EJS DATE: 1/31/12
DRAWING NUMBER: 8653253A

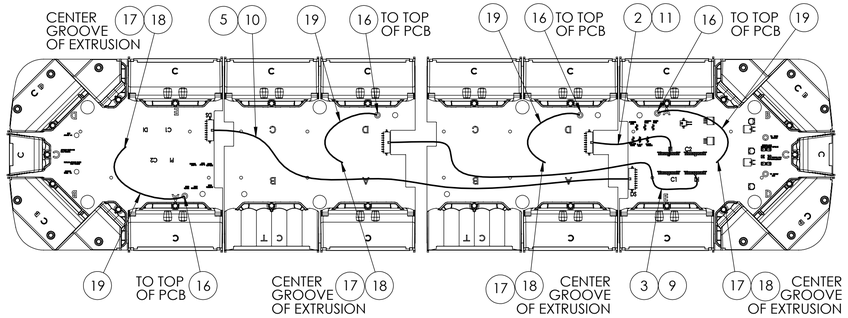

INTERNAL WIRING (45")

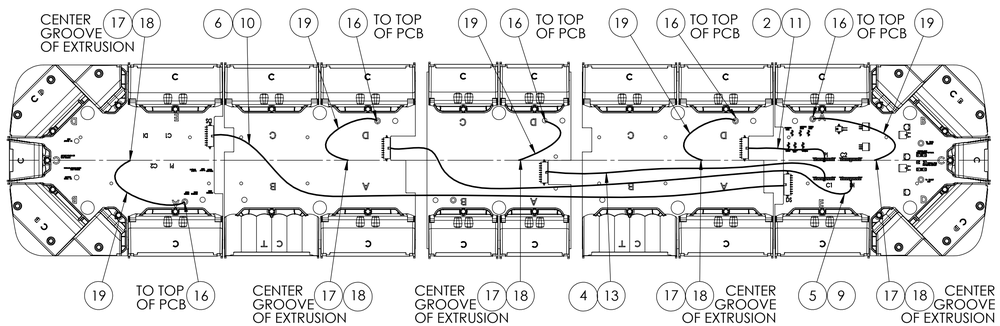

INTERNAL WIRING (53")

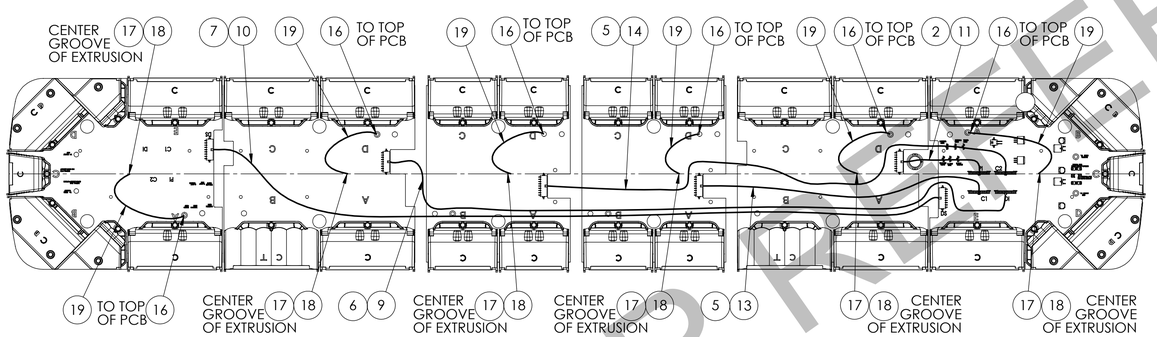

INTERNAL WIRING (61")

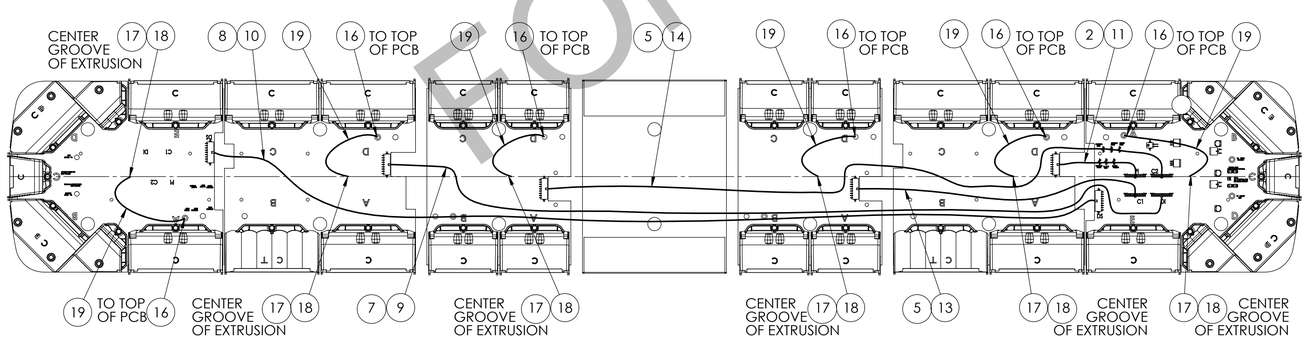

INTERNAL WIRING (70")

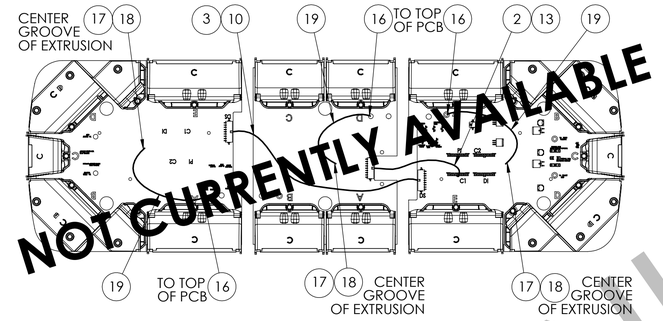

INTERNAL WIRING (32")

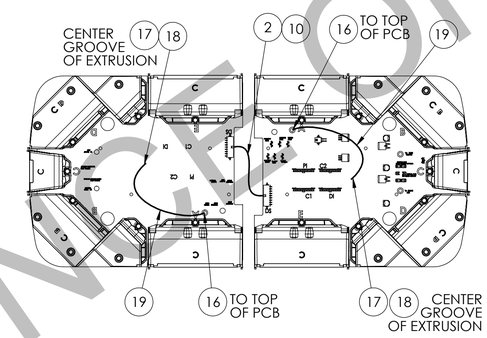

INTERNAL WIRING (24")

NOT CURRENTLY AVAILABLE

REV.	ITEM	PART NO.	QTY.	DESCRIPTION
	1	1751617	1	INCOMING CABLE, LPX
	2	1751355-12	AR	CABLE ASSY., 12"
	3	1751355-18	AR	CABLE ASSY., 18"
	4	1751355-22	AR	CABLE ASSY., 22"
	5	1751355-28	AR	CABLE ASSY., 28"
	6	1751355-38	AR	CABLE ASSY., 38"
	7	1751355-48	AR	CABLE ASSY., 48"
	8	1751355-56	AR	CABLE ASSY., 56"
	9	1612318-DI	1	LABEL, WIRE,DI
	10	1612318-DS	1	LABEL, WIRE,DS
	11	1612318-PI	1	LABEL, WIRE,PI
	12	---	---	---
	13	1612318-C1	AR	LABEL, WIRE,C1
	14	1612318-C2	AR	LABEL, WIRE,C2
	15	1612318-C3	AR	LABEL, WIRE,C3
	16	7011A103-06	AR	SCR,THD,FRM,HEX HE,STL, 8-32
	17	7011A122-06	AR	SCR,#10 TYP.B,HEX W.HD.THD
	18	7075A031	AR	LOCKWASHER, EXT.TTH, #10 SCR
	19	T300218-10-255	AR	T-WIRE, BLACK,10" (5/16NT:5/16NT)

NOTES:
1. ADD LABELS (ITEM #9 -iTEM #15) TO CONTROLLER END OF CABLES. *{AS NEEDED}*

WIRING NOTES:
1. ATTACH INCOMING CABLE (1751617) FOLLOWING COLOR LABELS ON TERMINALS ON PC BOARD.
2. DO NOT CUT ANY UNUSED WIRES.

FUNCTIONS:

RED	- +12V FRONT
YELLOW	- +12V REAR
BLUE	- MODE 2
GREEN	- PATTERN SELECT
ORANGE	- TAKEDOWNS/WORKLIGHTS
BROWN	- DRIVERSIDE ALLEY
BRN/WHT	- PASSENGERSIDE ALLEY
GREY	- WHITE LIGHT FLASH
BLACK	- (-) GROUND

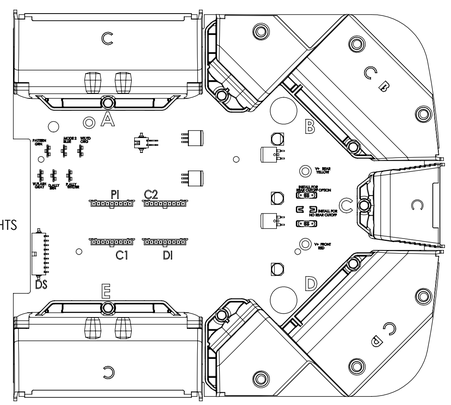

STANDARD CABLE WIRING (ALL LENGTHS)

FOR REFERENCE ONLY

SHEET: 2 OF 3
UNITS: INCHES

FEDERAL SIGNAL SAFETY & SECURITY GROUP
2645 FEDERAL SIGNAL DRIVE UNIVERSITY PARK, IL 60484

Unless Otherwise Specified
Angles ±0.5°
x.xx[x.x] ±0.015[±0.4]
x.xxx[x.xx] ±0.005[±0.12]
MATERIAL DEFINED AND INFORMATION CONTAINED IS PROPRIETARY TO FEDERAL SIGNAL CORPORATION. IS OR MAY BE THE SUBJECT OF PATENT APPLICATIONS AND MAY NOT BE COPIED, DIVULGED TO OTHERS, OR USED FOR MANUFACTURING WITHOUT CONSENT.

REV.	CHANGE	DATE	BY
	SEE SHEET 1		

NAME: FINAL ASSY., LPXD
FINISH: N/A
SCALE AT 0 SIZE: NONE
REMOVE BURRS, SHARP CORNERS AND EDGES
THIRD ANGLE PROJECTION
MATERIAL: N/A
UNIT OF MEASURE: RF
DRAWN BY: RM DATE: 1/31/12
CHKD. BY: EJS DATE: 1/31/12
DRAWING NUMBER: 8653253A

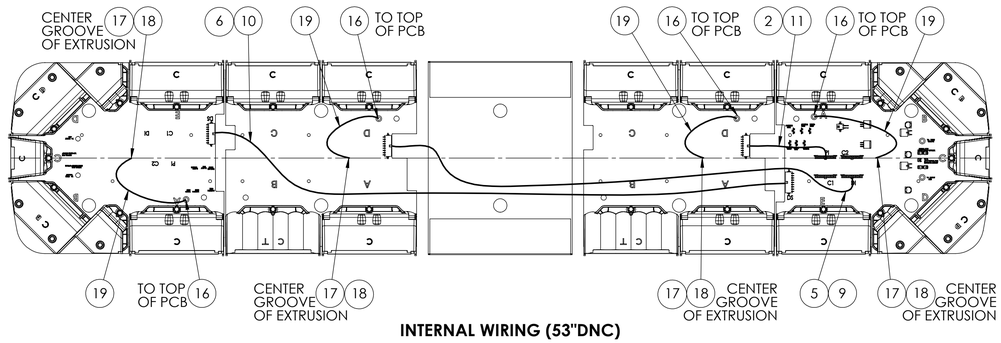

INTERNAL WIRING (53"DNC)

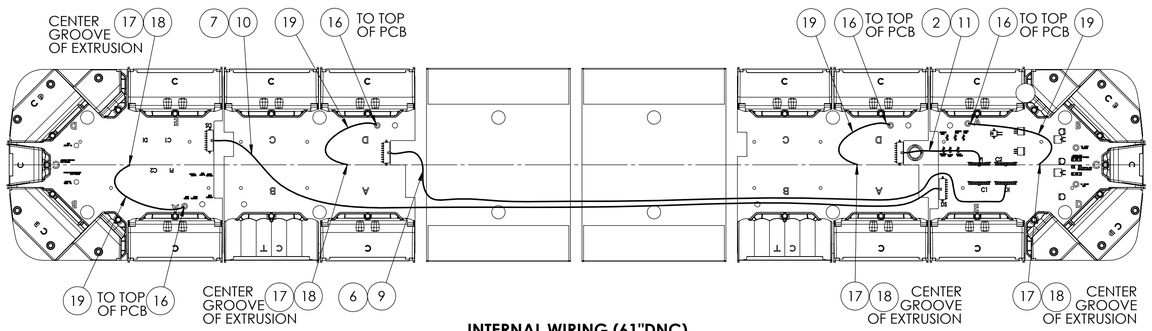

INTERNAL WIRING (61"DNC)

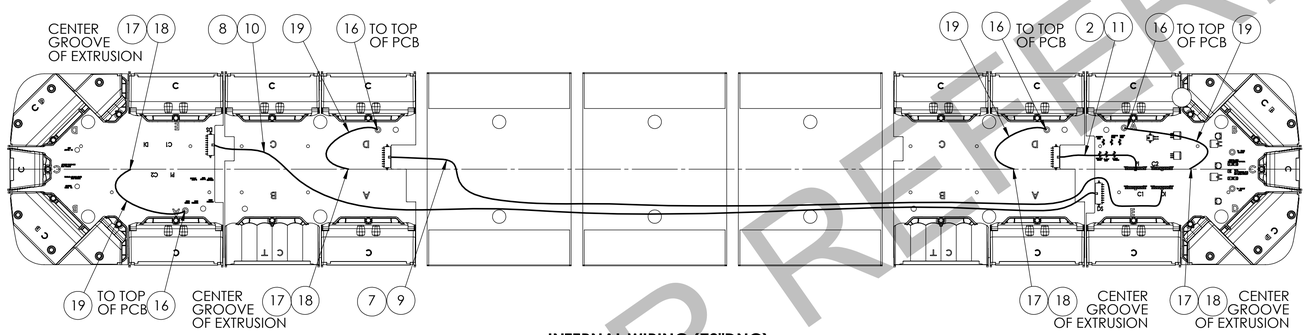

INTERNAL WIRING (70"DNC)

REV.	ITEM	PART NO.	QTY.	DESCRIPTION
	1	1751617	1	INCOMING CABLE, LPX
	2	1751355-12	AR	CABLE ASSY., 12"
	3	1751355-18	AR	CABLE ASSY., 18"
	4	1751355-22	AR	CABLE ASSY., 22"
	5	1751355-28	AR	CABLE ASSY., 28"
	6	1751355-38	AR	CABLE ASSY., 38"
	7	1751355-48	AR	CABLE ASSY., 48"
	8	1751355-56	AR	CABLE ASSY., 56"
	9	1612318-DI	1	LABEL, WIRE,DI
	10	1612318-DS	1	LABEL, WIRE,DS
	11	1612318-PI	1	LABEL, WIRE,PI
	12	---	---	---
	13	1612318-C1	AR	LABEL, WIRE,C1
	14	1612318-C2	AR	LABEL, WIRE,C2
	15	1612318-C3	AR	LABEL, WIRE,C3
	16	7011A103-06	AR	SCR,THD,FRM,HEX HE,STL, 8-32
	17	7011A122-06	AR	SCR,#10 TYP.B,HEX W.HD.THD
	18	7075A031	AR	LOCKWASHER, EXT.TTH, #10 SCR
	19	T300218-10-255	AR	T-WIRE, BLACK,10" (5/16NT:5/16NT)

NOTES:
1. ADD LABELS (ITEM #9 -ITEM #15) TO CONTROLLER END OF CABLES. *{AS NEEDED}*

CENTER UPGRADE KIT INSTALLATION

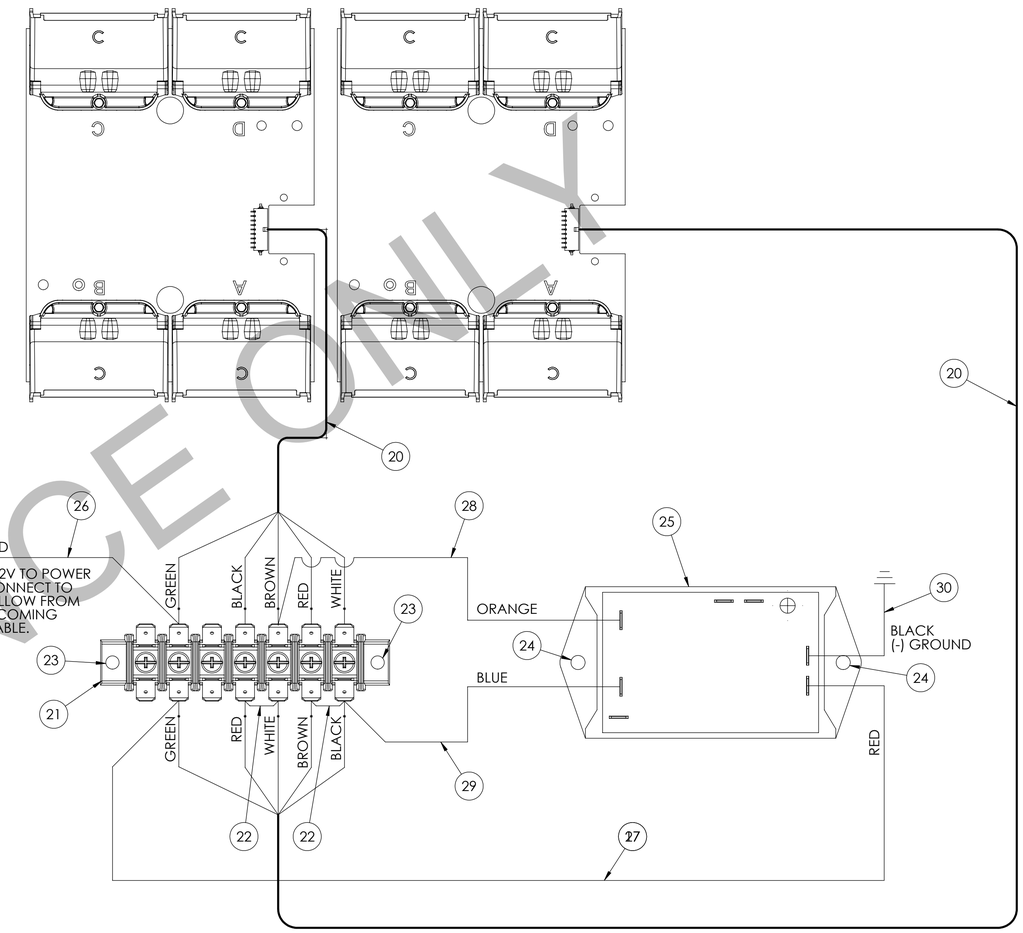

REV	ITEM	QTY.	PART NO.	DESCRIPTION
	20	2	1751480	WIRE HARNESS, 15" CUSTOM
	21	1	229226	TERMINAL BLOCK 7-POS. NO
	22	2	233A198	JUMPER, TWO POSITION
	23	2	7011A103-09	SCR,THD FRM HEX W HD STL
	24	3	7011A122-06	SCR,#10 TYP.B HEX W.HD.TH
	25	1	8554057	FLASHER,2-CH,HI-SIDE,SLR2
	26	1	T300218-02-143	T-WIRE, RED,21"(1/4NT:1/4NT)
	27	1	T300218-02-219	T-WIRE,RED,18"(1/4NT:1/4NT)
	28	1	T300218-03-046	T-WIRE,ORG,12"(1/4NT:1/4NT)
	29	1	T300218-06-042	T-WIRE,BLU,12"(1/4NT:1/4NT)
	30	1	T300214-10-095	T-WIRE,BLK,10"(1/4NT:1/4NT)
	31	1	224A216-04L	TERMINAL,QD,250 RCPT,16-14
	32	1	T300218-10-255	T-WIRE, BLACK,10" (5/16NT:5/16NT)

CENTER UPGRADE KIT NOTES:
1. RING TERMINAL ON YELLOW WIRE MUST BE REPLACED BY A FEMALE FAST-ON TERMINAL (ITEM #31)
2. USE T300218-10-255 (ITEM #32)TO CONNECT THE POWER CONNECTIONS ON THE CONTROLLER BOARD. THE RED WIRE FROM THE INCOMING CABLE WILL CONTROL THE WHOLE BAR.

FOR REFERENCE ONLY

SHEET: 3 OF 3
UNITS: INCHES

FEDERAL SIGNAL SAFETY & SECURITY GROUP
2645 FEDERAL SIGNAL DRIVE
UNIVERSITY PARK, IL 60484

Unless Otherwise Specified:
X(mm) ±0.5
Angles ±0.5°
X.XX[X.X] ±0.015[±.4]
X.XXX[X.XX] ±0.005[±.13]

MATERIAL TO CHANGE AND REPRODUCE PRODUCT AS PROVIDED HEREIN, TO MAKE A PRODUCT IN THE FIELD, OR A PART OF A PRODUCT, OR TO MAKE A PRODUCT IN THE MANUFACTURING SITE(S) OTHER.

REV.	CHANGE	DATE	BY
	SEE SHEET 1		

NAME: FINAL ASSY., LPXD
FINISH: N/A
REMOVE BURRS, SHARP CORNERS AND EDGES
SCALE AT D SIZE: NONE
THIRD ANGLE PROJECTION
MATERIAL: N/A
UNIT OF MEASURE: RF
DRAWN BY: RM DATE: 1/31/12
CHKD. BY: ** DATE: 1/31/12
DRAWING NUMBER: 8653253A