2561446B
REV. B 1203
Printed in U.S.A.

FEDERAL SIGNAL CORPORATION
Emergency Products

INSTALLATION INSTRUCTIONS FOR 8567079-04 COMPACT SPEAKER MOUNTING KIT BEHIND GRILLE MOUNTING SYSTEM (1998 FORD CROWN VICTORIA)

SAFETY MESSAGE TO INSTALLERS OF SIREN SPEAKERS

⚠ WARNING

The lives of people depend on your proper installation and servicing of Federal products. It is important to read and follow all instructions shipped with the products. In addition, listed below are some other important safety instructions and precautions you should follow:

Before Installation

Qualifications

- To properly install an electronic siren: you must have a good understanding of automotive electrical procedures and systems, along with proficiency in the installation and service of safety warning equipment. Always refer to the vehicle's service manuals when performing equipment installations on a vehicle.

Sound Hazards

- Your hearing and the hearing of others, in or close to your emergency vehicle, could be damaged by loud sounds. This can occur from short exposures to very loud sounds, or from longer exposures to moderately loud sounds. For hearing conservation guidance, refer to federal, state, or local recommendations. OSHA Standard 1910.95 offers guidance on “Permissible Noise Exposure.”

- All effective sirens and horns produce loud sounds (120 dB) that may cause permanent hearing loss. Always minimize your exposure to siren sound and wear hearing protection. Do not sound the siren indoors or in enclosed areas where you and others will be exposed to the sound.

- Federal Signal siren amplifiers and speakers are designed to work together as a system. Combining a siren and speaker from different manufacturers may reduce the warning effectiveness of the siren system and may damage the components. You should verify or test your combination to make sure the system works together properly and meets federal, state and local standards or guidelines.

During Installation

- DO NOT get metal shavings inside the product. Metal shavings in the product can cause the system to fail. If drilling must be done near the unit, place an ESD approved cover over the unit to prevent metal shavings from entering the unit. Inspect the unit after mounting to be sure there are no shavings present in or near the unit.

- DO NOT connect this system to the vehicle battery until ALL other electrical connections are made, mounting of all components is complete, and you have verified that no shorts exist. If wiring is shorted to vehicle frame, high current conductors can cause hazardous sparks resulting in electrical fires or flying molten metal.

- Be sure the siren amplifier and speaker(s) in your installation have compatible wattage ratings.

- In order for the electronic siren to function properly, the ground connection must be made to the NEGATIVE battery terminal.

- Sound output will be severely reduced if any objects are in front of the speaker. If maximum sound output is required for your application, you should ensure that the front of the speaker is clear of any obstructions.

- Install the speaker(s) as far forward on the vehicle as possible, in a location which provides maximum signaling effectiveness and minimizes the sound reaching the vehicle’s occupants. Refer to the National Institute of Justice guide 500-00 for further information.

- Mounting the speakers behind the grille will reduce the sound output and warning effectiveness of the siren system. Before mounting speakers behind the grille, make sure the vehicle operators are trained and understand that this type of installation is less effective for warning others.

- Sound propagation and warning effectiveness will be severely reduced if the speaker is not facing forward. Carefully follow the installation instructions and always install the speaker with the projector facing forward.

- DO NOT install the speaker(s) or route the speaker wires where they may interfere with the operation of air bag sensors.

- Installation of two speakers requires wiring speakers in phase.

- Never attempt to install aftermarket equipment, which connects to the vehicle wiring, without reviewing a vehicle wiring diagram - available from the vehicle manufacturer. Insure that your installation will not affect vehicle operation and safety functions or circuits. Always check vehicle for proper operation after installation.

- DO NOT install equipment or route wiring or cord in the deployment path of an air bag.

- Locate the control head so the vehicle, controls, and microphone can be operated safely.

- When drilling into a vehicle structure, be sure that both sides of the surface are clear of anything that could be damaged.

After Installation

- After installation, test the siren system and light system to ensure that it is operating properly.

- Test all vehicle functions, including horn operation, vehicle safety functions and vehicle light systems, to ensure proper operation. Ensure that installation has not affected vehicle operation or changed any vehicle safety function or circuit.

- After testing is complete, provide a copy of these instructions to the instructional staff and all operating personnel.

- File these instructions in a safe place and refer to them when maintaining and/or reinstalling the product.

Failure to follow all safety precautions and instructions may result in property damage, serious injury, or death to you or others.

A. UNPACKING.

After unpacking the kit, carefully check all envelopes, shipping labels, and tags before removing or destroying them. Ensure that the parts listed in the KIT CONTENTS LIST are contained in the packing carton.

B. KIT CONTENTS LIST.

Qty.	Description	Part Number
1	Bracket, Speaker Mounting	8567088
4	Screw, 1/4" X 5/8", Type B	7011165-10
4	Lockwasher, Split, 1/4"	7074A015

C. INSTALLATION.

1. Raise the vehicle hood. See figure 1. Locate the plastic panel between the radiator crossbar and the grille fascia.

2. Remove and retain the eight plastic snap-in panel fasteners. Remove the plastic panel.

⚠ WARNING

To avoid reduction of sound output and damage to speaker, ensure that speaker is mounted with wires protruding from the right side of the speaker when viewing it from the front.

3. See figure 2. Assemble the bracket to the speaker using the bolts and lockwashers supplied. Adjust the front of the speaker so that it is parallel with the leading edge of the mounting bracket, and tighten the bolts securely.

4. See figure 3. Remove and retain the screw on the left side of the hood latch mechanism. Locate the top of the radiator crossbar, to the left (passenger's side) of the hood latch. Position the speaker/bracket assembly on the radiator crossbar and align the mounting ear hole with the previously removed screw hole. Install the previously removed screw and tighten securely.

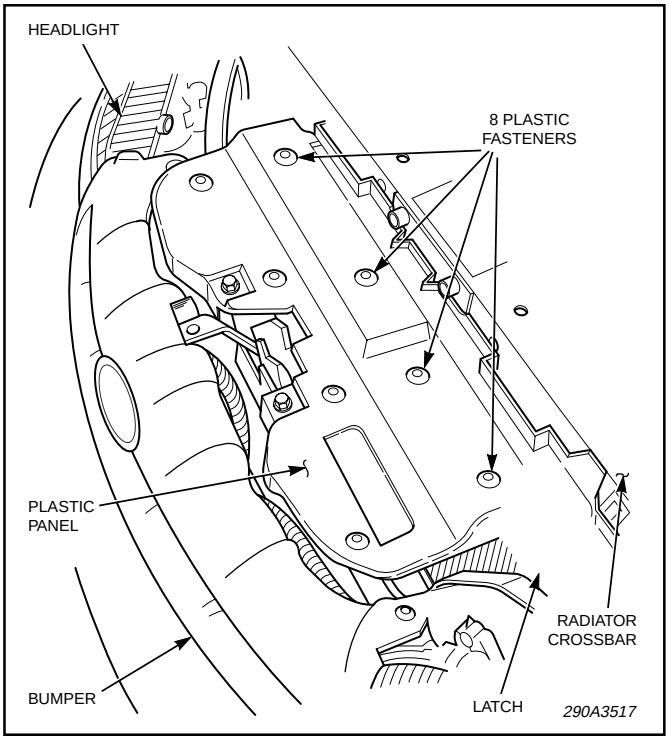

Figure 1.

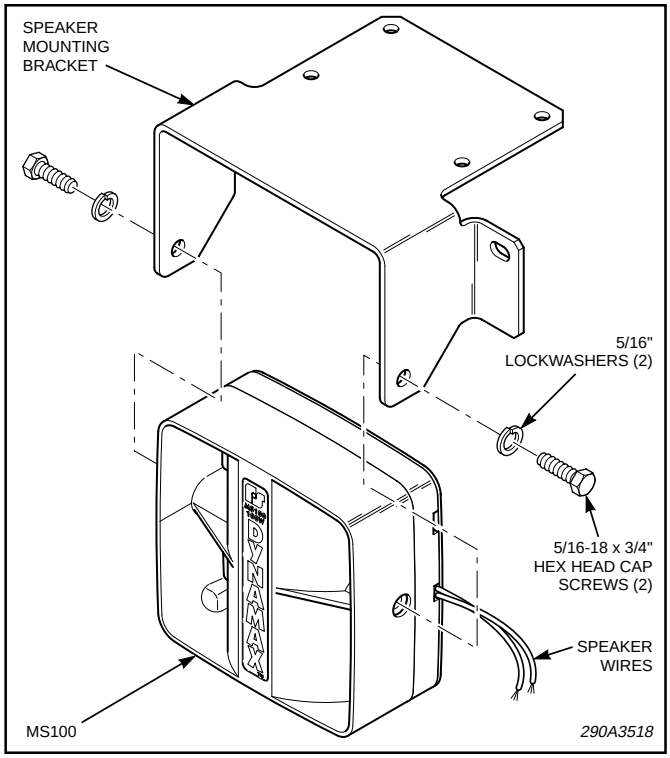

Figure 2.

5. Using the bracket as a template, center punch four drill position marks on the radiator crossbar.

CAUTION

Before drilling holes in ANY part of a vehicle, be sure that both sides of the mounting surface are clear of parts that could be damaged; such as brake lines, fuel lines, electrical wiring or other vital parts. Note that the vehicle's air conditioning condenser, located directly below the two rear bracket hole locations, MUST be protected during the drilling operation.

6. Drill four 3/16" holes in the radiator crossbar at the drill position marks.

7. To complete the mounting, secure the speaker/bracket in position using the 1/4" x 5/8" thread-forming screws and split lockwashers. See figure 3.

8. Connect the two leads from the speaker to the electronic siren's speaker cable. Refer to the instruction sheet packed with the electronic siren for additional details.

⚠ WARNING

All effective sirens and horns produce loud sounds (120 dB) that may cause permanent hearing loss. Always minimize your exposure to siren sound and wear hearing protection. Do not sound the siren indoors or in enclosed areas where you and others will be exposed to the sound.

9. Test the speaker for proper operation.

10. Replace the plastic panel and secure in position using the previously removed plastic snap-in panel fasteners.

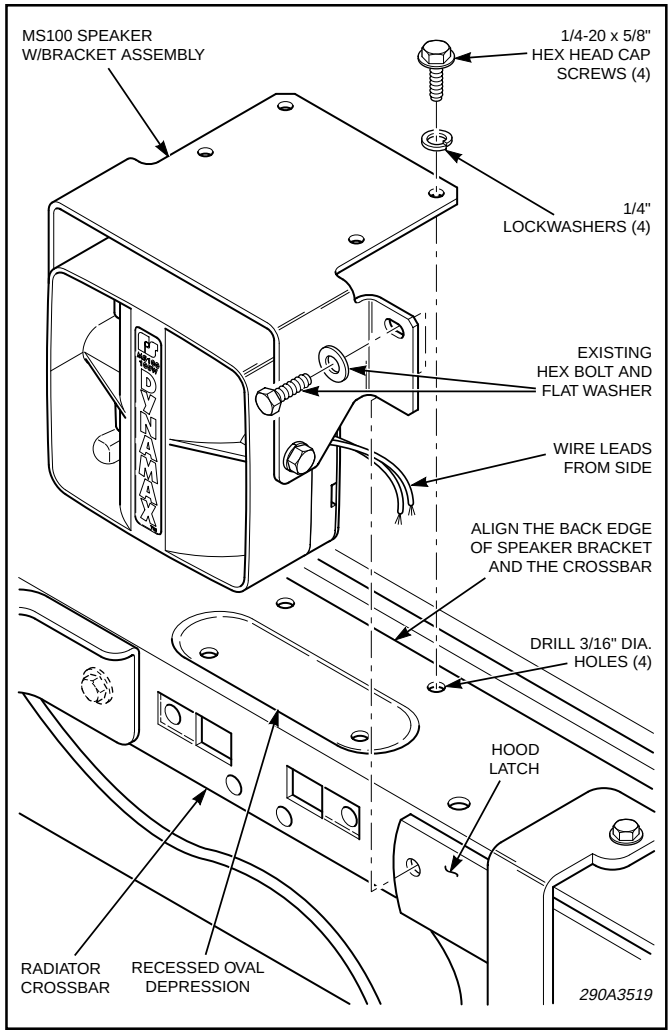

Figure 3.

D. SERVICE.

Opening the unit will void the warranty. This speaker has no field serviceable parts. The factory can and will service your speaker. If you are experiencing problems with the speaker, send it to:

Service Department
Federal Signal Corporation
2645 Federal Signal Drive
University Park, IL 60466

SAFETY MESSAGE TO PERSONNEL SERVICING FEDERAL SIGNAL SIREN SPEAKERS

⚠ WARNING

The lives of people depend on your proper servicing of Federal products. It is important to read and follow all instructions shipped with the products. In addition, listed below are some other safety instructions and precautions you should follow:

- Read and understand all instructions in this manual before servicing the electronic siren or speaker.
- To properly service an electronic siren or speaker: you must have a good understanding of automotive electrical procedures and systems, along with proficiency in the installation and service of safety warning equipment. Always refer to the vehicle's service manuals when performing service on a vehicle.
- Electronic circuit and speaker repairs must be performed by a qualified and competent electronic technician.
- Your hearing and the hearing of others, in or close to your emergency vehicle, could be damaged by loud sounds. This can occur from short exposures to very loud sounds, or from longer exposures to moderately loud sounds. For hearing conservation guidance, refer to federal, state, or local recommendations. OSHA Standard 1910.95 offers guidance on “Permissible Noise Exposure.”
- All effective sirens and horns produce loud sounds (120 dB) that may cause permanent hearing loss. Always minimize your exposure to siren sound and wear hearing protection. Do not sound the siren indoors or in enclosed areas where you and others will be exposed to the sound.
- DO NOT connect this system to the positive terminal of the battery until servicing is complete, and you have verified that there are no short circuits to ground.
- In order for the electronic siren to function properly, the ground connection must be made to the NEGATIVE battery terminal.
- After repair, test the electronic siren and speaker system to ensure that it is operating properly.
- Federal Signal siren amplifiers and speakers are designed to work together as a system. Combining a siren and speaker from different manufacturers may reduce the warning effectiveness of the siren system and may damage the components. You should verify or test your combination to make sure the system works together properly and meets both federal, state and local standards or guidelines.

Failure to follow all safety precautions and instructions may result in property damage, serious injury, or death to you or others.

SAFETY MESSAGE TO OPERATORS OF FEDERAL SIGNAL ELECTRONIC SIRENS AND LIGHT/SOUND SYSTEMS

⚠ WARNING

The lives of people depend on your safe operation of Federal products. It is important to read and follow all instructions shipped with the products. In addition, listed below are some other important safety instructions and precautions you should follow:

Qualifications

- To properly use an electronic siren and speaker(s): you must have a good understanding of general vehicle operation, a high proficiency in the use of safety warning equipment, and thorough knowledge of state and federal UNIFORM TRAFFIC CODES.

Sound Hazards

- Your hearing and the hearing of others, in or close to your emergency vehicle, could be damaged by loud sounds. This can occur from short exposures to very loud sounds, or from longer exposures to moderately loud sounds. For hearing conservation guidance, refer to federal, state, or local recommendations. OSHA Standard 1910.95 offers guidance on "Permissible Noise Exposure."

- All effective sirens and horns produce loud sounds (120 dB) that may cause permanent hearing loss. Always minimize your exposure to siren sound, roll up your windows and wear hearing protection. Do not sound the siren indoors or in enclosed areas where you and others will be exposed to the sound. Only use the siren for emergency response situations.

Sound Limitations

- Before using the vehicle, check to see if the siren speakers are concealed from view. If the siren speaker is not in clear view on the front of the vehicle, use extra caution when operating the vehicle. A concealed siren speaker installation is less effective at warning others.

- Maximum sound output will be severely reduced if any objects are in front of the speaker. If your installation has obstructions in front of the speaker, drive even more cautiously.

- Frequently inspect the speaker to ensure that it is clear of any obstruction, such as mud or snow, which will reduce maximum sound output.

Signaling Limitations

- Be aware that the use of your visual and audible signaling devices does not give you the right to force your way through traffic. Your emergency lights, siren, and actions are REQUESTING the right-of-way.

- Although your warning system is operating properly, it may not alert everyone. People may not hear, see, or heed your warning signal. You must recognize this fact and continue driving cautiously.

- Situations may occur which obstruct your warning signal when natural or man-made objects are between your vehicle and others. This can also occur when you raise your hood or trunk lid. If these situations occur, be especially careful.

Driving Limitations

- At the start of your shift, you should ensure that the light/sound system is securely attached to the vehicle and operating properly.

- If the unique combination of emergency vehicle equipment installed in your vehicle has resulted in the siren controls being installed in a position that does not allow you to operate them by touch only, OPERATE CONTROLS ONLY WHILE YOUR VEHICLE IS STOPPED.

- If driving conditions require your full attention, you should avoid operating the siren controls while the vehicle is in motion.

Continuing Education

- File these instructions in a safe place and refer to them periodically. Give a copy of these instructions to new recruits and trainees.

Failure to follow these safety precautions may result in property damage, serious injury, or death to you, to passengers, or to others.